

Axion 2

Manual

Content

Specifications
About the device

- Description
- Package Contents
- Features
- Components and Controls

Power supply

- Precautions
- Recommendations for Battery Use
- Battery Charging
- Battery Installation
- External Power Supply

Getting Started

- Powering on and Image Settings
- Button Operation

Interface

- Status Bar
- Quick Menu
- Main Menu
- Enter the Main Menu
- Amplification Level
- Colour Modes
- Smoothing Filter
- User Mode
- Icon Brightness
- PiP Mode
- Wi-Fi Activation
- Wi-Fi Settings
- Microphone
- Calibration Mode
- General Settings
- Defective Pixel Repair
- Restore Default Pixel Map

Device Information

Functions

Video Recording and Photography
Discrete Digital Zoom
PiP Function
Display-Off Function
Wi-Fi Function
Stadiametric Rangefinder
Installing the Device on a Tripod
USB Connection

Software

Stream Vision 2
Firmware Update

Maintenance

Technical Inspection
Technical Maintenance and Storage

Troubleshooting
Legal Compliances and Disclaimers

Specifications

XQ35

	Model	XQ35
	SKU	77478
	Microbolometer	
	Type	uncooled
	Resolution, Pixels	384x288
	Pixel Pitch, µm	17
	Sensor NETD, mK	< 40
	System NETD, mK	< 20
	Frame Rate, Hz	50
	Optical Characteristics	
	Optical Magnification, x	2
	Smooth Digital Zoom, x	2-8
	Digital Zoom, x	x1, x2, x4
	Lens Focus, mm	35
	Relative Aperture, D/f'	1.0
	Minimum Focus Distance, m/y	5 / 5.47

Exit Pupil Diameter, mm/inch	4 / 0.16
Angular Field of View (Horizontal x Vertical), degree	10.7x8
Linear Field of View, m at 100 m	18.2
Eyepiece Focus Range, Dioptre	+4 / -5
Detection Distance for Deer-Sized Objects, m/y	1300 / 1422
Display	
Type	AMOLED
Resolution, Pixels	640x400
Operational Characteristics	
Power Supply, V	3 - 4.2
Battery Type/Capacity/Nominal Output Voltage	APS 5 Li-ion Battery Pack / 4900 mAh / DC 3.7 V
External Power Supply	5 V, 9 V (USB Type-C)
Battery Run Time at t=22°C, hours*	11
Degree of Protection, IP Code (IEC60529)	IPX7
Operating Temperature Range, °C / °F	-25 … +40 / -13 – +104

Dimensions, mm/inch	152x50x74 / 5.98x1.97x2.91
Weight (with battery), kg/oz	0.38 / 13.4
Video Recorder	
Photo/Video Resolution, Pixels	528x400
Video/Photo Format	.mp4 / .jpg
Built-in Memory	16 GB
Wi-Fi Channel**	
Frequency	2.4/5 GHz
Standard	IEEE 802.11 b/g/n/ac

* Actual battery life may vary depending on the use of Wi-Fi and the built-in video recorder.

** Reception range may vary depending on various factors: obstacles, other Wi-Fi networks.

XQ35 PRO

Model	**XQ35 Pro**
SKU	77501
Microbolometer	
Type	uncooled
Resolution, Pixels	384x288
Pixel Pitch, µm	17
Sensor NETD, mK	< 25
System NETD, mK	< 18
Frame Rate, Hz	50
Optical Characteristics	
Optical Magnification, x	2
Smooth Digital Zoom, x	2-8
Digital Zoom, x	x1, x2, x4
Lens Focus, mm	35
Relative Aperture, D/f'	1.0
Minimum Focus Distance, m/y	5 / 5.47
Exit Pupil Diameter, mm/inch	4 / 0.16
Angular Field of View (Horizontal x Vertical), degree	10.7x8

Linear Field of View, m at 100 m	18.2
Eyepiece Focus Range, Dioptre	+4 / -5
Detection Distance for Deer-Sized Objects, m/y	1300 / 1422
Display	
Type	AMOLED
Resolution, Pixels	640x400
Operational Characteristics	
Power Supply, V	3 - 4.2
Battery Type/Capacity/Nominal Output Voltage	APS 5 Li-ion Battery Pack / 4900 mAh / DC 3.7 V
External Power Supply	5 V, 9 V (USB Type-C)
Battery Run Time at t=22°C, hours*	11
Degree of Protection, IP Code (IEC60529)	IPX7
Operating Temperature Range, °C / °F	-25 … +40 / -13 – +104
Dimensions, mm/inch	152x50x74 / 5.98x1.97x2.91
Weight (with battery), kg/oz	0.38 / 13.4
Video Recorder	

Photo/Video Resolution, Pixels	528x400
Video/Photo Format	.mp4 / .jpg
Built-in Memory	16 GB
Wi-Fi Channel**	
Frequency	2.4/5 GHz
Standard	IEEE 802.11 b/g/n/ac

* Actual battery life may vary depending on the use of Wi-Fi and the built-in video recorder.

** Reception range may vary depending on various factors: obstacles, other Wi-Fi networks.

XG35

	Model	XG35
	SKU	77476
	Microbolometer	
	Type	uncooled
	Resolution, Pixels	640x480
	Pixel Pitch, µm	12
	Sensor NETD, mK	< 40
	System NETD, mK	< 20
	Frame Rate, Hz	50
	Optical Characteristics	
	Optical Magnification, x	2.5
	Smooth Digital Zoom, x	2.5-20
	Digital Zoom, x	x1, x2, x4, x8
	Lens Focus, mm	35
	Relative Aperture, D/f'	1.0
	Minimum Focus Distance, m/y	5 / 5.47
	Exit Pupil Diameter, mm/inch	4 / 0.16
	Angular Field of View (Horizontal x Vertical), degree	12.5x9.4
	Linear Field of View, m at 100 m	21.9

Eyepiece Focus Range, Dioptre	+4 / -5
Detection Distance for Deer-Sized Objects, m/y	1750 / 1914
Display	
Type	AMOLED
Resolution, Pixels	1024x768
Operational Characteristics	
Power Supply, V	3 - 4.2
Battery Type/Capacity/Nominal Output Voltage	APS 5 Li-ion Battery Pack / 4900 mAh / DC 3.7 V
External Power Supply	5 V, 9 V (USB Type-C)
Battery Run Time at t=22°C, hours*	7
Degree of Protection, IP Code (IEC60529)	IPX7
Operating Temperature Range, °C / °F	-25 … +40 / -13 – +104
Dimensions, mm/inch	152x50x74 / 5.98x1.97x2.91
Weight (with battery), kg/oz	0.38 / 13.4
Video Recorder	
Photo/Video Resolution, Pixels	1024x768

Video/Photo Format	.mp4 / .jpg
Built-in Memory	16 GB
Wi-Fi Channel**	
Frequency	2.4/5 GHz
Standard	IEEE 802.11 b/g/n/ac

* Actual battery life may vary depending on the use of Wi-Fi and the built-in video recorder.

** Reception range may vary depending on various factors: obstacles, other Wi-Fi networks.

Description

Axion 2thermal imaging monoculars are designed for use both at night-time and during the day and provide exceptional image quality even in adverse weather conditions (fog, smog, rain) and beyond obstacles like branches, tall grass, dense foliage, etc. known to hinder target detection.

Unlike night-vision devices based on electron-optical converters, thermal imaging devices do not need an external light source and are resistant to bright light.

Axion 2thermal imagers are designed for various applications including hunting, observation, security, terrain orientation, search and rescue operations, etc.

Package Contents

- Axion 2 thermal monocular
- APS 5 rechargeable battery
- 2 battery-locking covers
- Power adapter
- USB Type-C cable with USB Type-A adapter
- Carrying case
- Hand strap
- Quick reference user manual
- Lens cleaning cloth
- Warranty information
- Tripod adapter

Features

- Compact and lightweight
- Functional and ergonomic design
- 8-colour display palette
- 3 calibration modes: Manual, Semi-Automatic, Automatic
- Three levels of sensitivity enhancement: Normal, High, Ultra
- Stadiametric Rangefinder
- Display-Off function
- Defective pixel repair
- Updatable firmware
- Wide operating temperature range (-25°C to +40°C / -13°F to +104°F)
- Fully waterproof (IPX7 rated)
- Tripod mount

Video/Audio Recording

- Built-in video and sound recorder
- Integration with iOS and Android devices
- Wi-Fi remote control and viewing using a smartphone
- Storing photos and videos in Cloud when using the Stream Vision 2 App

Battery Pack

- Quick Change Li-Ion Battery Pack APS 5
- Charging from USB Power Bank
- Quick-Charge power delivery

Components and Controls

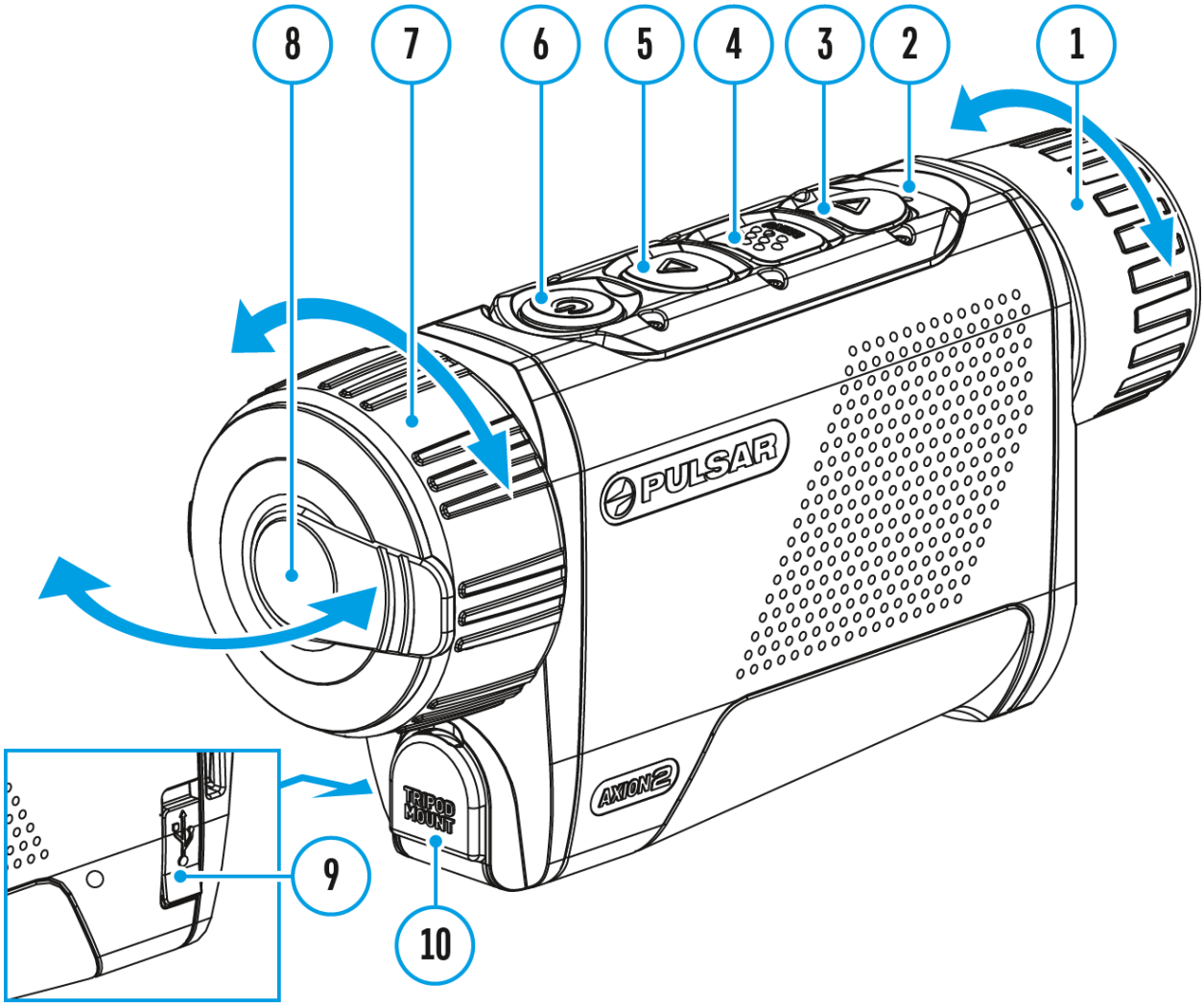

1. Eyepiece focus ring
2. LED indicator
3. DOWN/REC button
4. MENU button
5. UP/ZOOM button
6. Power ON/OFF/CALIBRATION button
7. Lens focus ring
8. Lens cover
9. USB Type-C connector

10. Tripod adapter socket

LED indicator **(2)** displays the current status of the device:

LED Indicator	Operating Mode
	Device is turned on
	The device is turned on/video recording
	The device is turned on/battery charge < 10%
	The device is turned on/video recording/battery charge < 10%

Precautions

- Always use the APS 5 charger (purchased separately) to charge APS 5 batteries. Using an unsuitable charger can cause irreparable damage to the battery and fire.
- Do not charge the battery immediately after exposure to a cold environment. Let the battery warm for at least 30 minutes before charging.
- Do not leave the battery unattended while charging.
- Do not use the charger if it has been modified or damaged.
- Do not leave the battery in a plugged-in charger after charging is complete.
- Do not expose the battery to high temperatures or open flames.
- Do not use the battery as a power source for devices that do not support APS 5 batteries.
- Do not disassemble or deform the battery or charger.
- Do not drop or strike the battery or charger.
- Protect the battery and charger from water and moisture.
- Keep the battery out of the reach of children.

Recommendations for Battery Use

- The battery should be partially charged (50 to 80 %) for long-term storage.
- Charge at an ambient temperature of 0°C to +35°C (32°F to 95°F) or the lifespan of the battery will decrease significantly.
- Using the battery at sub 0°C (<32°F) ambient temperature decreases battery capacity. This is normal and not a defect.
- Using the battery at temperatures outside the range of -25°C to +40°C (-13°F to 104°F) may reduce battery life.
- The battery is short-circuit protected. Any situation that may cause short-circuiting should be avoided.

Battery Charging

Show device diagram

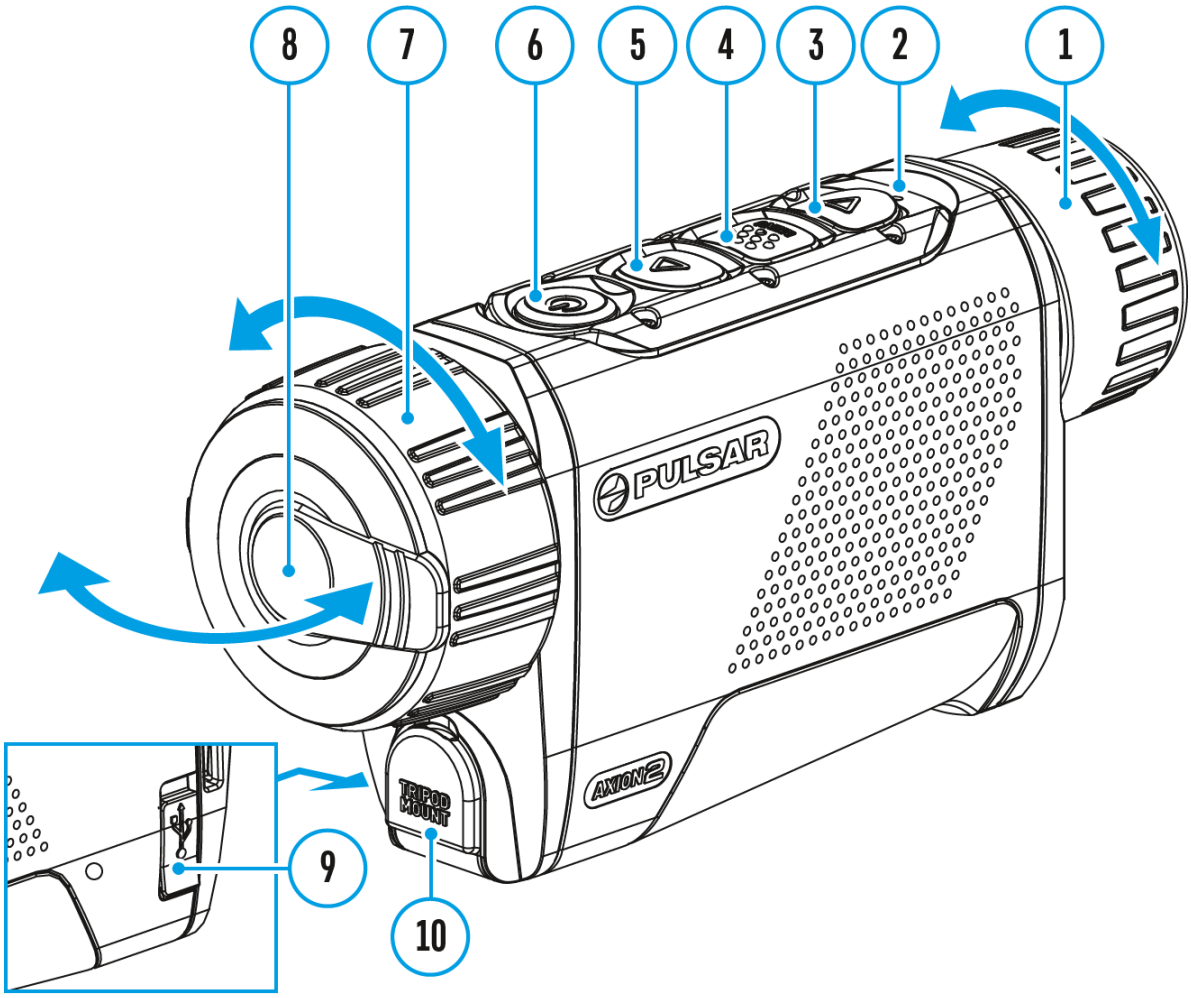

The **Axion 2**thermal imager comes with an APS 5 rechargeable Lithium-ion battery. APS 5 batteries support USB Power Delivery fast charging technology when using a standard charging set (charger*, USB Type-C cable, power adapter). Before first use, make sure the battery is fully charged.

The icon in the status bar will flash when the battery is low. The battery needs to be charged.

To check the battery level when the device is turned off briefly press the **MENU (4)**

button. The LED indicator will display the battery charge status (**see table**).

Option 1

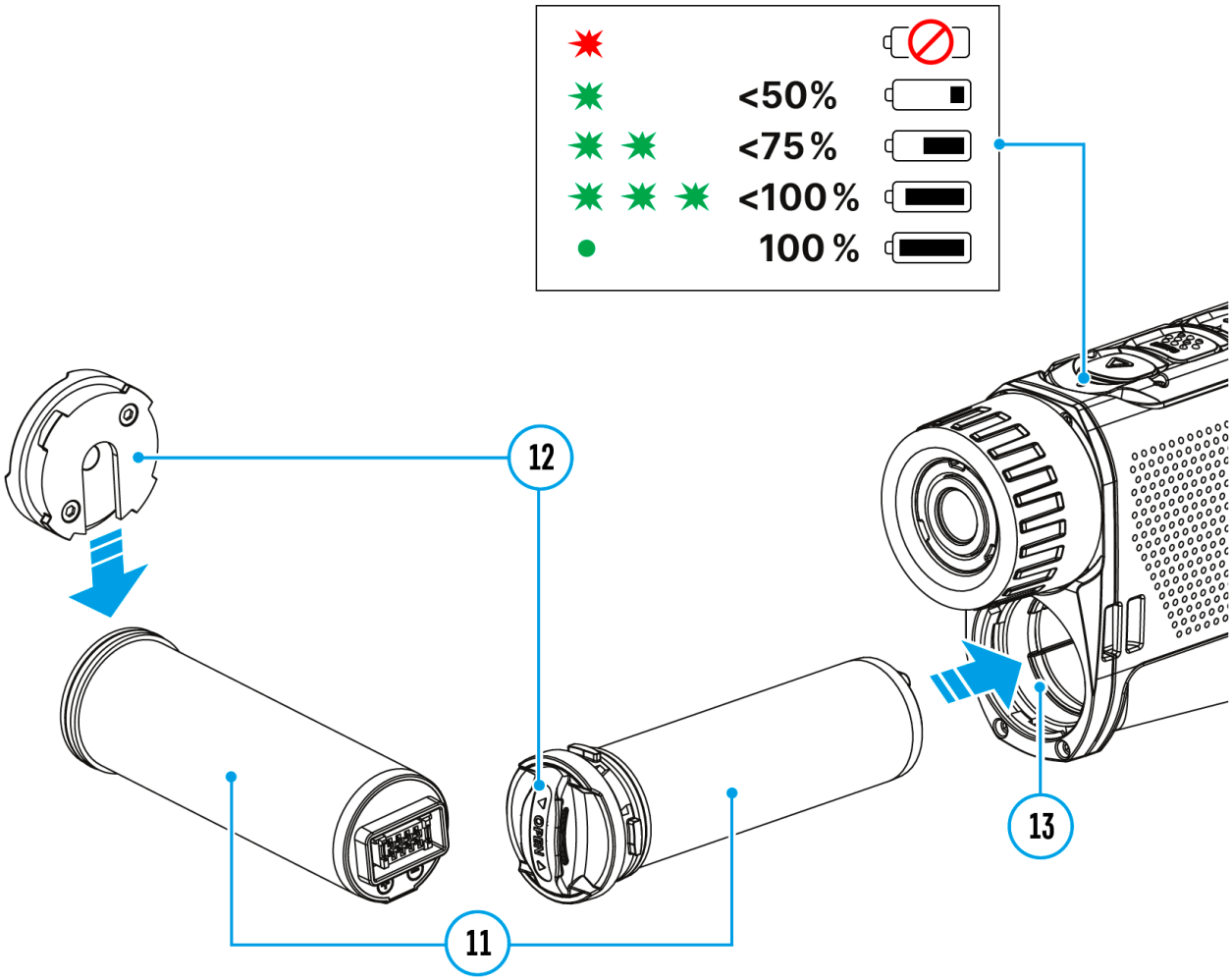

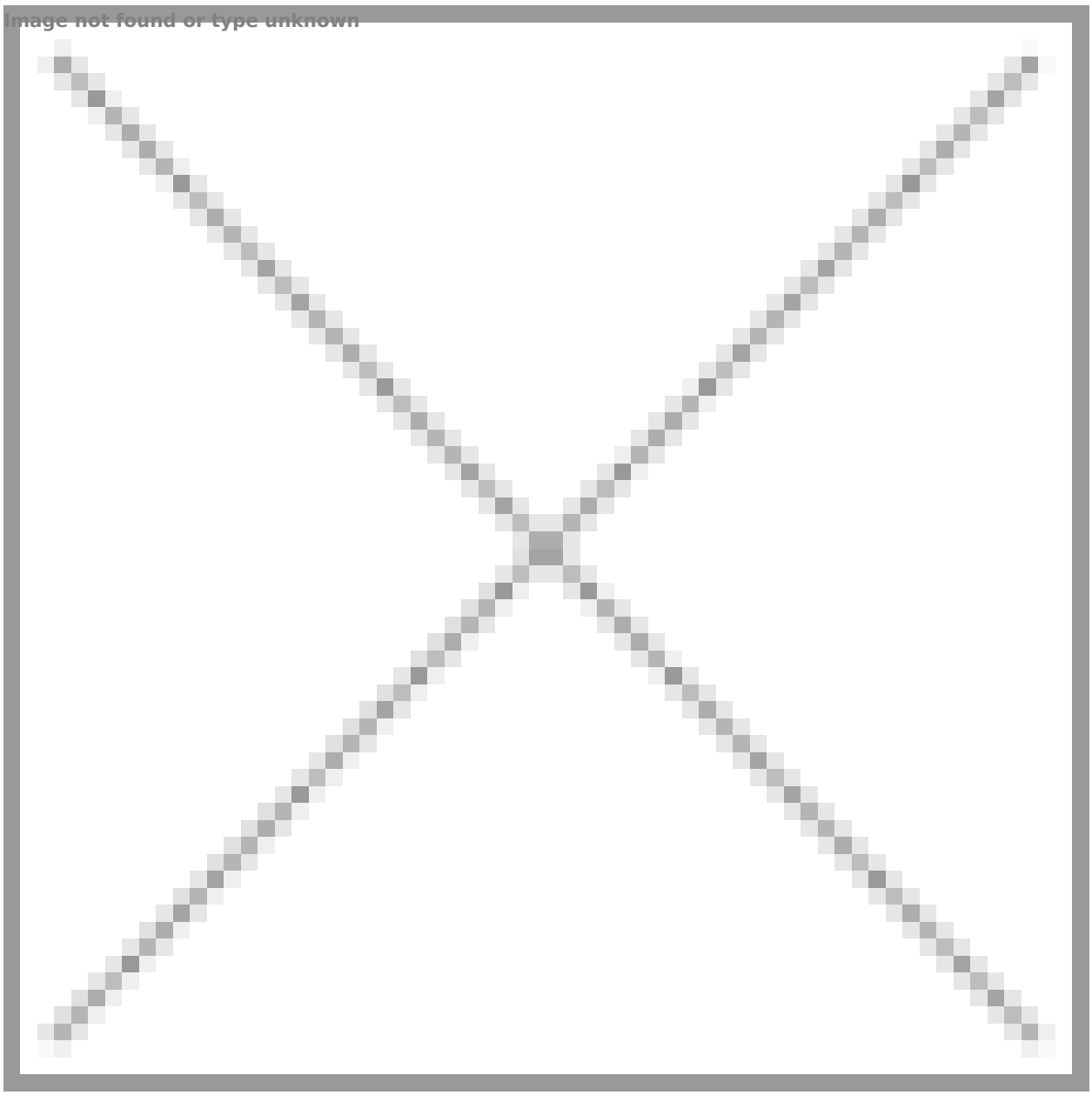
Image not found or type unknown

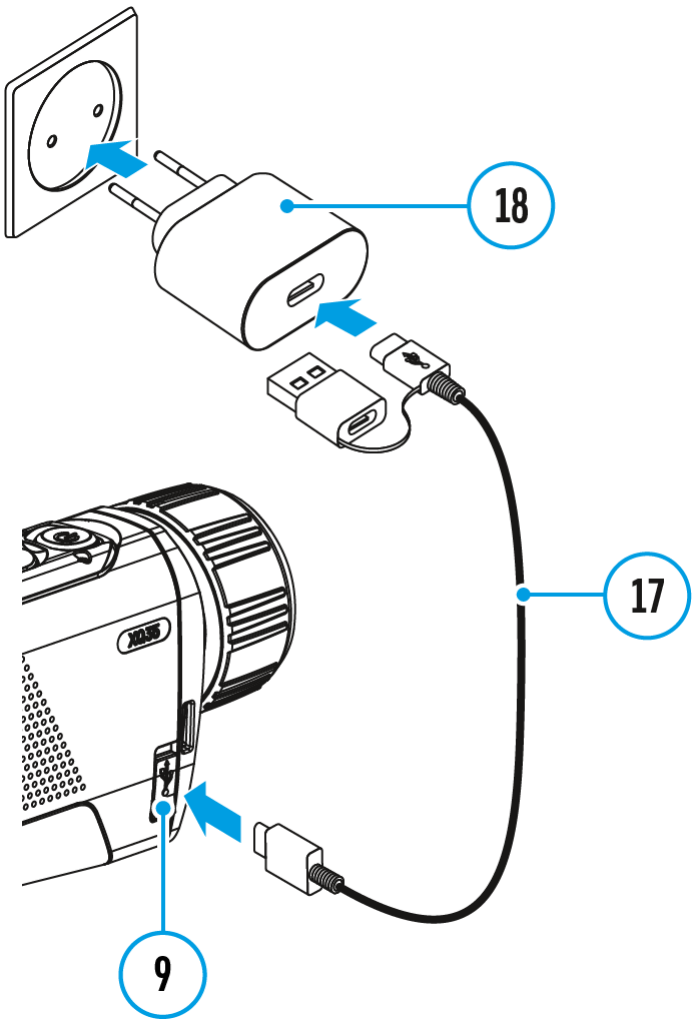

mage not found or type unknown

1. **Install** the APS 5 battery **(11)** in the battery compartment **(13)** of the device.
2. Connect the USB cable **(17)** to the USB Type-C connector **(9)** of the device.
3. Connect the other end of the USB cable **(17)** to the Power Adapter **(18)** by removing the USB Type-A adapter.

4. Plug the Power Adapter **(18)** into a 100-240 V socket**.**
5. Wait until the battery is fully charged (indication in the status bar:  Image not found or type unknown).

If the device is off, the LED indicator will display the battery charge status:

LED Indicator	Battery Charge Status
	Battery is empty
	Battery charge level is from 0% to 50%
	Battery charge level is from 51% to 75%
	Battery charge level is from 76% to 99%
Image not found or type unknown	Battery is full

Option 2

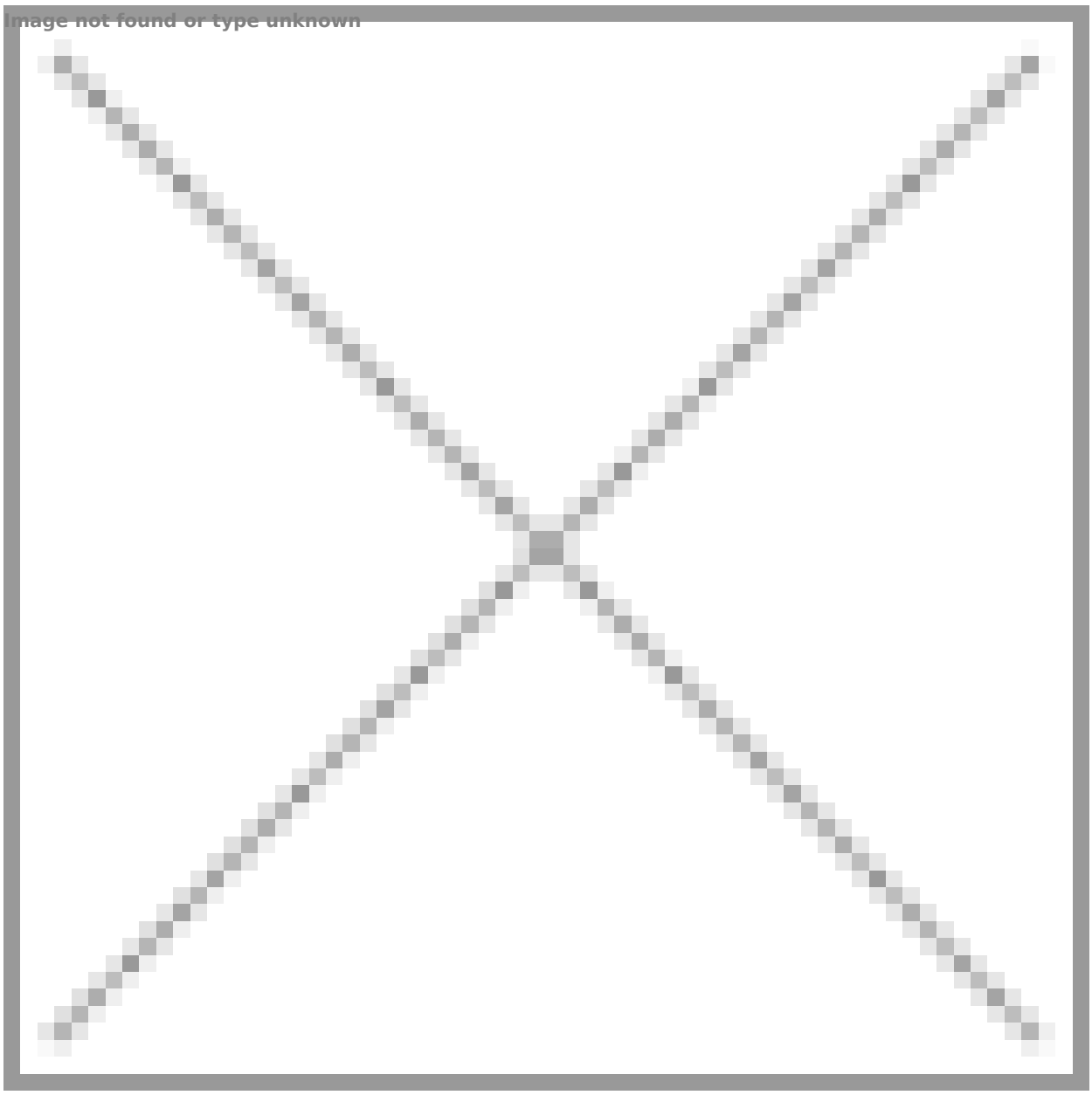
Image not found or type unknown

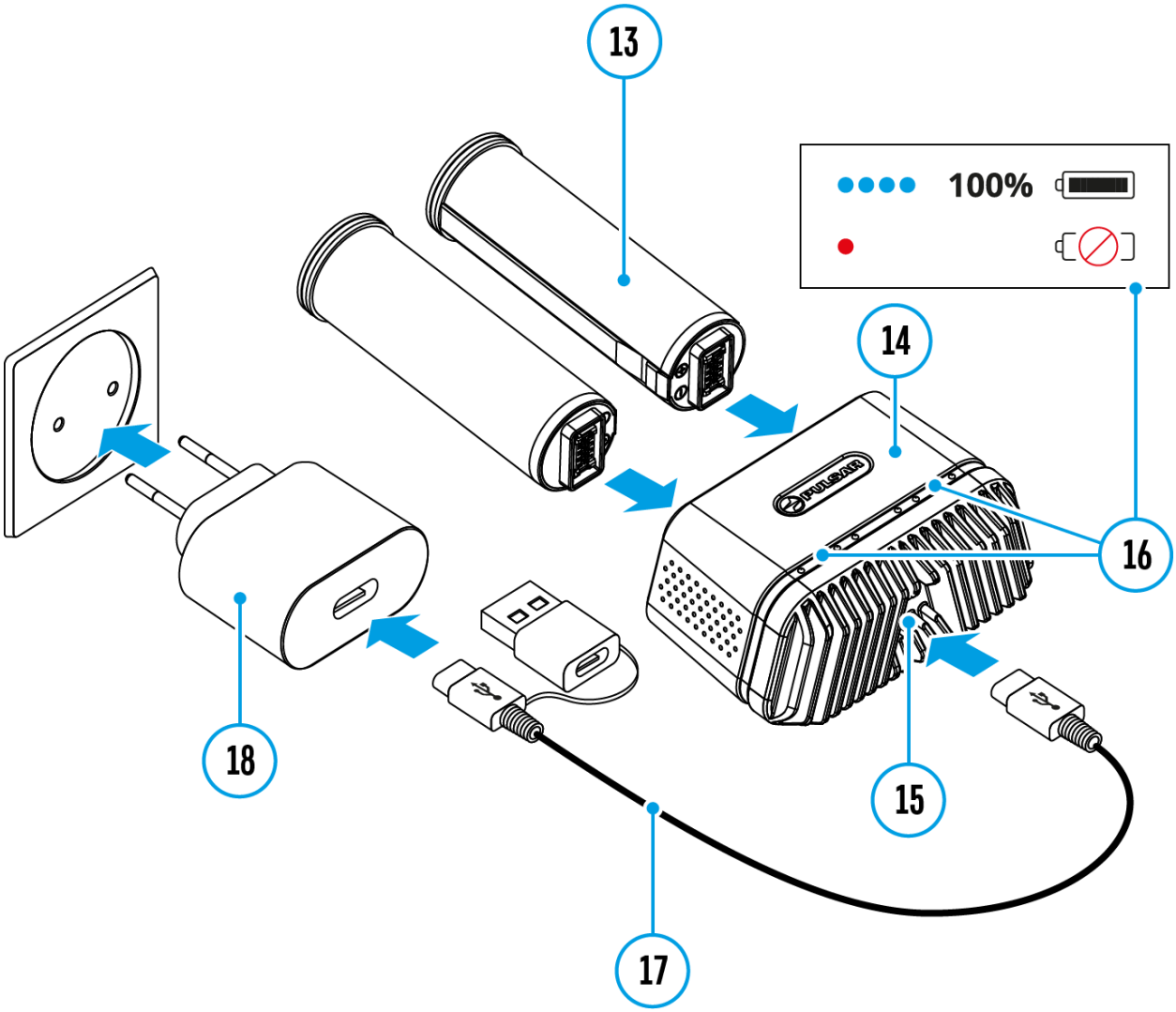

1. Insert the APS 5 battery **(13)** along the guide into the APS 5 charger* **(15)** slot as far as it will go.
2. Connect the plug of the USB Type-C cable **(17)** to the USB Type-C connector of the Power Adapter**(18)**by removing the USB Type-A adapter.
3. Plug the Power Adapter **(18)** into a 100-240 V socket**.**
4. Connect the other end of the USB Type-C cable **(17)** to the USB Type-C connector **(15)**of the charger.
5. LED indicators **(16)** will display the battery charge level (see Table).
6. Wait until the battery is fully charged (LED indication **(16)**: ○ ○ ○ ○).

Note: Two batteries can be charged at the same time, a second slot is provided for it.

LED indication (16) in the battery charging mode	Battery Level
	Battery charge level is from 0% to 25%
	Battery charge level is from 26% to 50%
	Battery charge level is from 51% to 80%
	Battery charge level is from 81% to 99%
	Battery is fully charged. Charging will automatically stop. The battery can be disconnected from the charger.
	Defective battery. **Do not use the battery!**

LED indication (16) in the standby mode**	Battery Level
	Battery charge level is from 0% to 25%
	Battery charge level is from 26% to 50%
	Battery charge level is from 51% to 80%
	Battery charge level is from 81% to 99%
	Battery is fully charged. It can be disconnected from the charger.
	Defective battery. **Do not use the battery!**

* Available separately

** Standby mode is when the batteries are in the charger but the Power Adapter is not connected. In this mode, the indicators are only on for 10 seconds.

Attention! When using a Power Adapter that does not support USB Power Delivery fast charging technology, the flicker frequency of the LED indicators decreases by a factor of 3 and the charge time increases.

Attention! The charger heats up during fast charging. Excess heat is removed through the radiator and does not affect the device operation.

Battery Installation

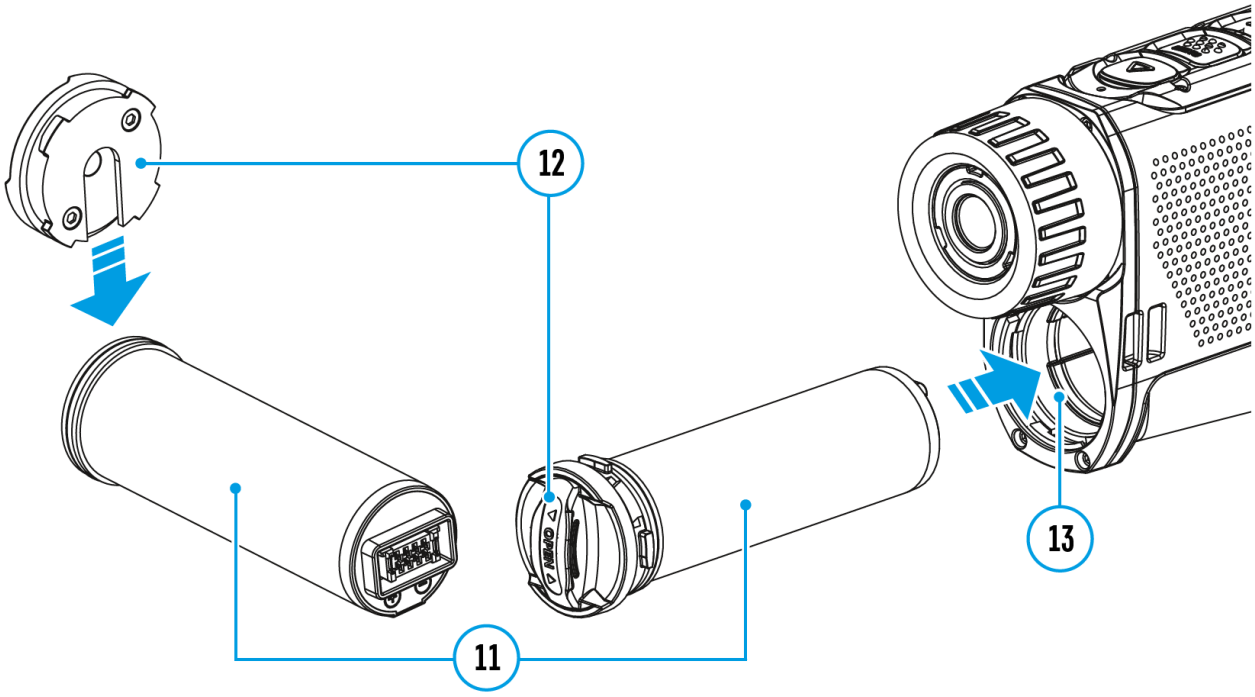

Attention! Before installing the battery, make sure that there is an undamaged rubber insulating ring on the battery. The ring is designed to protect your device from moisture getting inside. Damage to the device due to a missing ring is not covered by the warranty. To replace or purchase a ring, contact your **local distributor.**

1. Put the Lock-cover **(12)** on the rechargeable APS 5 battery **(11).**
2. Insert the APS 5 battery **(11)** along the guide into the battery compartment **(13).**
3. Lock the battery **(11)** by turning the Lock-cover **(12)**clockwise until it stops.
4. Turn the Lock-cover **(12)** counter-clockwise to remove the battery **(11).**

External Power Supply

Show device diagram

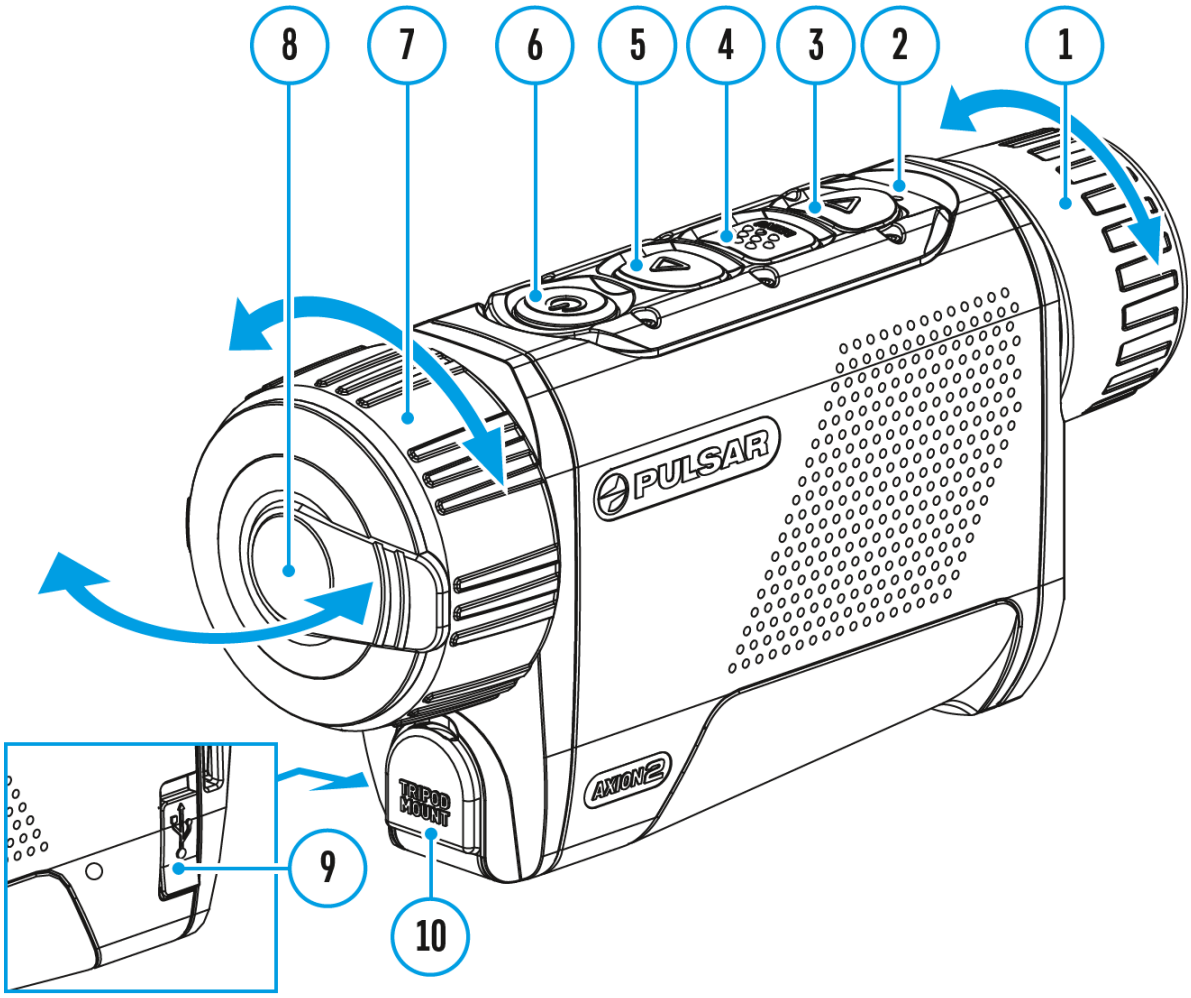

Power can be supplied from an external source such as a 5 V or 9 V power bank.

1. Connect the external power source to the USB Type-C connector **(9)** on the device.
2. The device will switch to draw power from the external source while the APS5 battery is gradually recharged.
3. A battery icon will appear on the display showing the percentage-charged level.
4. An icon will be displayed when the device is powered by an

external power source and the APS5 battery is not connected.

5. The device automatically switches to the APS 5 battery when the external power supply is disconnected.

Attention! Charging APS 5 batteries from an external source at temperatures below 0°C (<32°F) can reduce battery life. When using external power, connect the power bank to the device only after it has been turned on and working (warming) for at least several minutes.

Powering on and Image Settings

Show device diagram

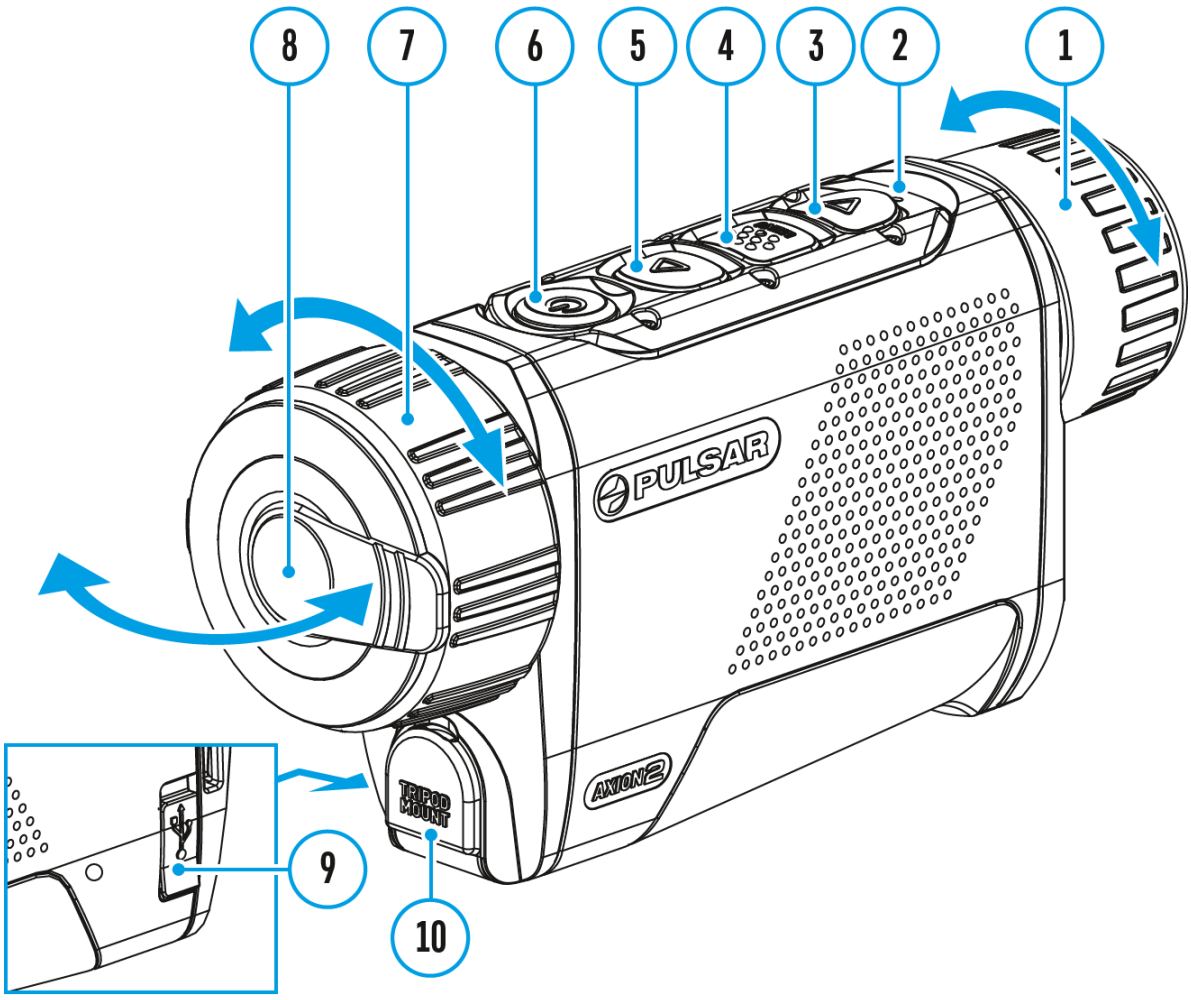

---

1. Open the lens cover **(8)**. The lens cover can be secured to the strap using the built-in magnet.
2. Press the **ON/OFF (6)**button briefly to turn on the device.
3. Adjust the eyepiece focus ring **(1)** of the device until the symbols on the display are sharp.
4. Rotate the lens focus ring **(7)** to focus on the object being observed.
5. Enter the main menu with a long press of the **MENU (4)** button and

select the desired **calibration mode**: Manual **(M)**, Semi-Automatic **(SA)** or Automatic **(A)**.

6. Calibrate the image by briefly pressing the **ON/OFF (6)**button**.**If the **SA** or **A** calibration mode has been selected the microbolometer is closed with an internal shutter automatically. However, if the **M** calibration mode has been selected you must close the lens cover before calibrating manually.
7. Select the required **amplification level** (**“Normal”** , **“High”** , **“Ultra”** ) by briefly pressing the **UP (5)** button.
8. Enter the main menu with a long press of the **MENU (4)** button and select the desired colour mode (for more details see the **Colour Modes** section).
9. Activate the quick menu by briefly pressing the **MENU (4)** button to adjust the brightness, contrast and smooth digital zoom (for more details see the **Quick Menu** section).
10. After use, turn the device off by a long press of the **ON/OFF (6)**

Observation conditions: time of day, weather, different observation objects affect the image quality. Custom settings for brightness, display contrast as well as the function of adjusting the microbolometer sensitivity level will help to achieve the desired quality in a particular situation.

Warning! Never point the lens at intensive energy sources such as laser radiation emitting devices or the sun. It can damage electronic components in the device. The warranty does not cover damage arising from failure to comply with operating instructions.

Button Operation

Operation	Button
Power device on	short press
Power device off	long press for 3 secs
Turn display off	long press for less than 3 secs
Turn display on	short press
Calibrate the microbolometer	short press
Switching amplification levels	short press
Control discrete digital zoom	long press
Video Recorder	**Button**
Start/pause/resume video recording	short press
Stop video recording	long press
Switch to video / photo	long press
Capture a photo	short press
Main Menu	**Button**
Enter main menu	long press
Navigation upwards/rightwards	short press
Navigation downwards/leftwards	short press
Confirm selection	short press
Exit submenu without confirming selection	long press
Exit menu (switch to viewing mode)	long press

Quick Menu	Button
Enter quick menu	short press
Switch between quick menu options	short press
Increase value	short press
Decrease value	short press
Exit quick menu	long press

Status Bar



The status bar at the bottom of the display shows current operating statuses via icons, including:

- Colour Mode:

 - White hot

 - Black hot

- Amplification level
- Smoothing Filter (displayed when the function is on)
- Calibration Mode (in Automatic calibration mode a countdown timer  will appear instead of the calibration mode icon 3 seconds before automatic calibration begins).
- Microphone
- Magnification
- Wi-Fi Connection
- Time
- Power Indication:

 - charge level if the device is powered by a battery

 - charge level if the device is charging and powered by a battery

 - no battery, the device is connected to an external power supply

Quick Menu

Show device diagram

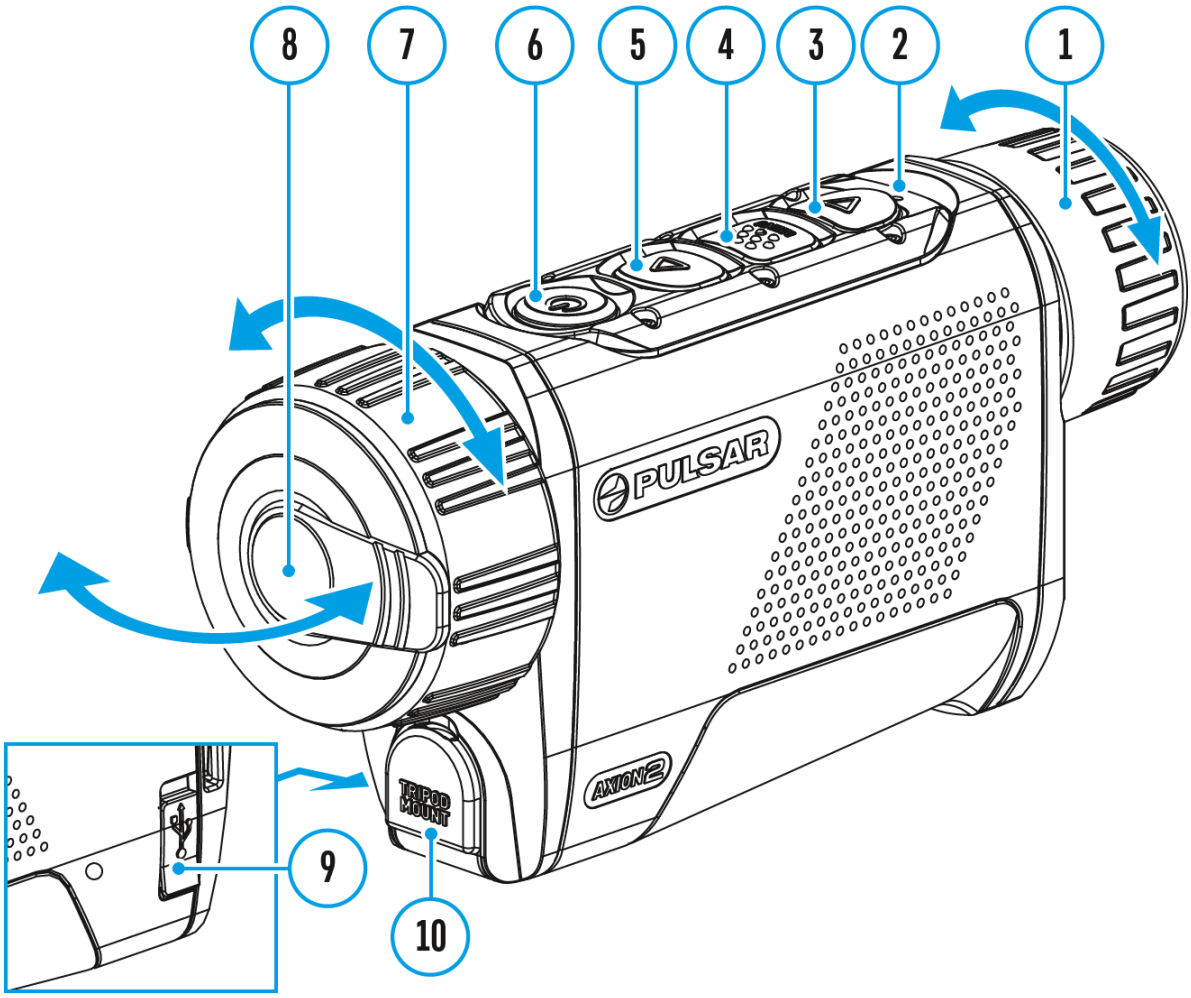

The basic settings (adjusting brightness and contrast, using the Stadiametric Rangefinder function) can be changed using the quick access menu.

- Enter the menu by briefly pressing the **MENU (4).**
- A short press of the **MENU (4)** button enables you to toggle between functions, as described below.

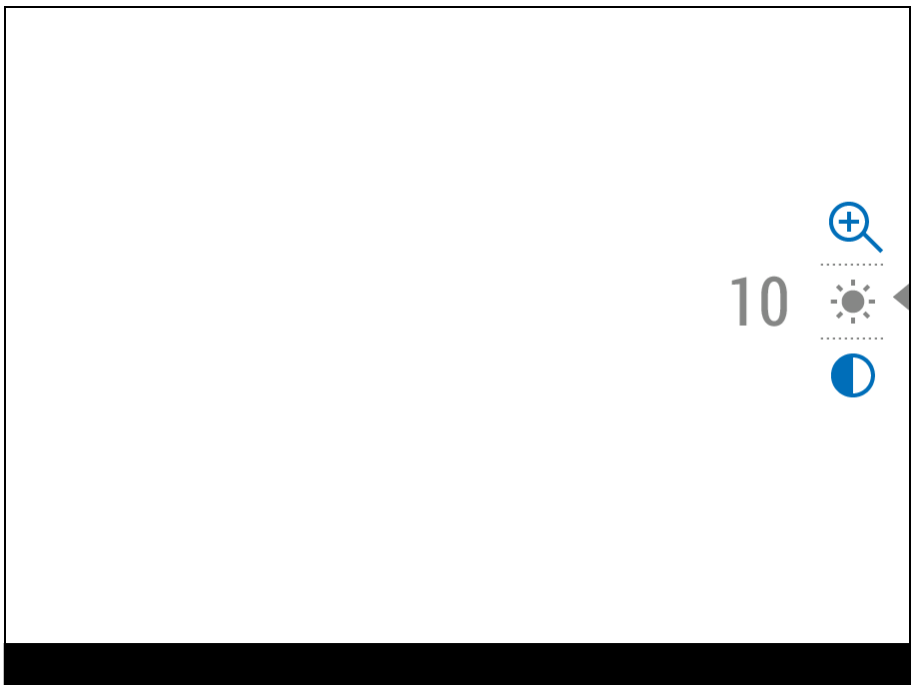

Brightness – press the **UP (5)/DOWN (3)** buttons to change display brightness from 0 to 20.

Contrast – press the **UP (5)/DOWN (3)** buttons to change image contrast from 0 to 20.

Stadiometric Rangefinder - change the position of special marker lines to determine the distance to the object being observed by pressing the **UP (5)/DOWN (3)** buttons (for more details see the **Stadiametric Rangefinder** section).

Smooth Digital Zoom – press the **UP (5)/DOWN (3)** button to change the value of the digital zoom from 2 to 8. The digital zoom changes in 0.1 increments.

Note: the magnification value is reset to the base value when the device is switched off.

- Press and hold the **MENU (4)** button to exit the menu or wait for 10 seconds to exit automatically.

Enter the Main Menu

Show device diagram

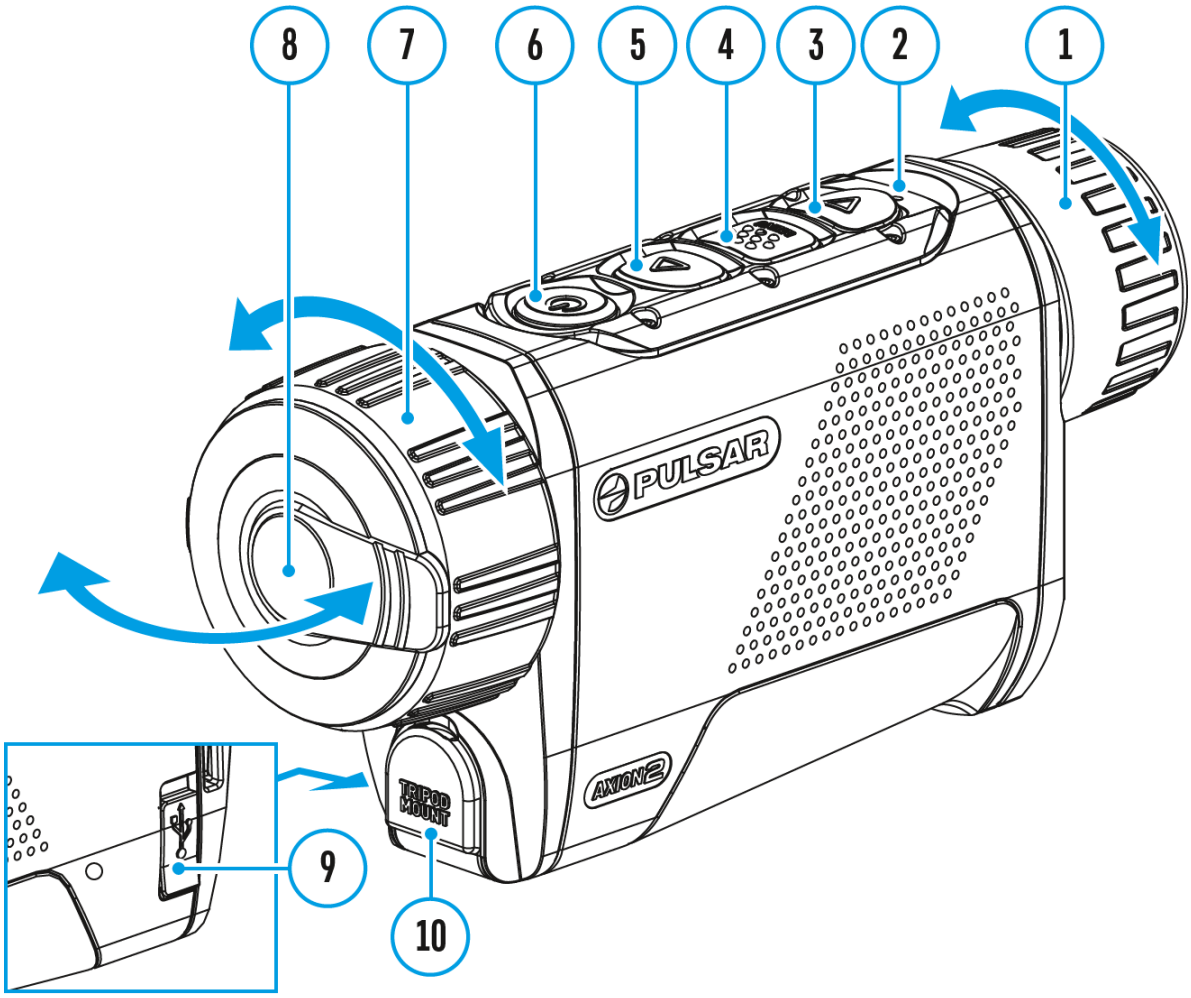

---

1. Enter the main menu with a long press of the **MENU (4)** button.
2. Press the **UP (5)/DOWN (3)** buttons to move through the menu items.
3. Press the **MENU (4)** button briefly to select the menu item.
4. Press and hold the **MENU (4)** button to exit the menu or wait for 10 seconds to exit automatically.
5. Automatic exit takes place after 10 seconds of inactivity.

Note: When entering the main menu, the background image darkens to enhance the menu visibility. This is normal and not a defect.

General View of Menu

Tab 1

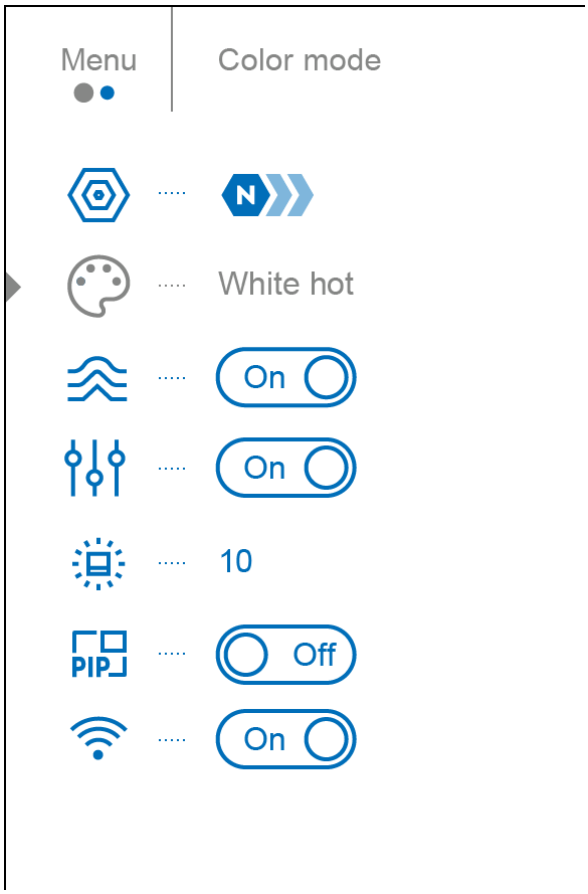

Tab 2

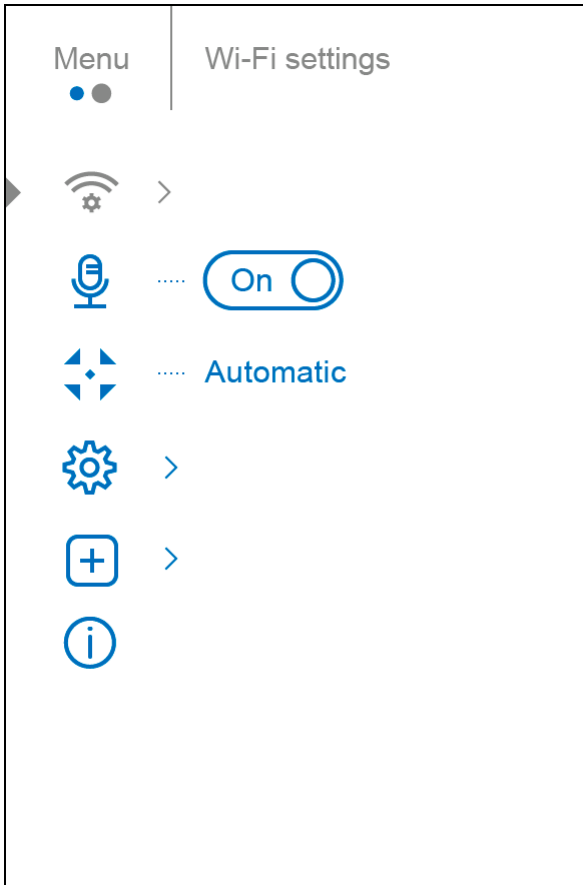
Menu
Wi-Fi settings
On
Automatic

Amplification Level

Show device diagram

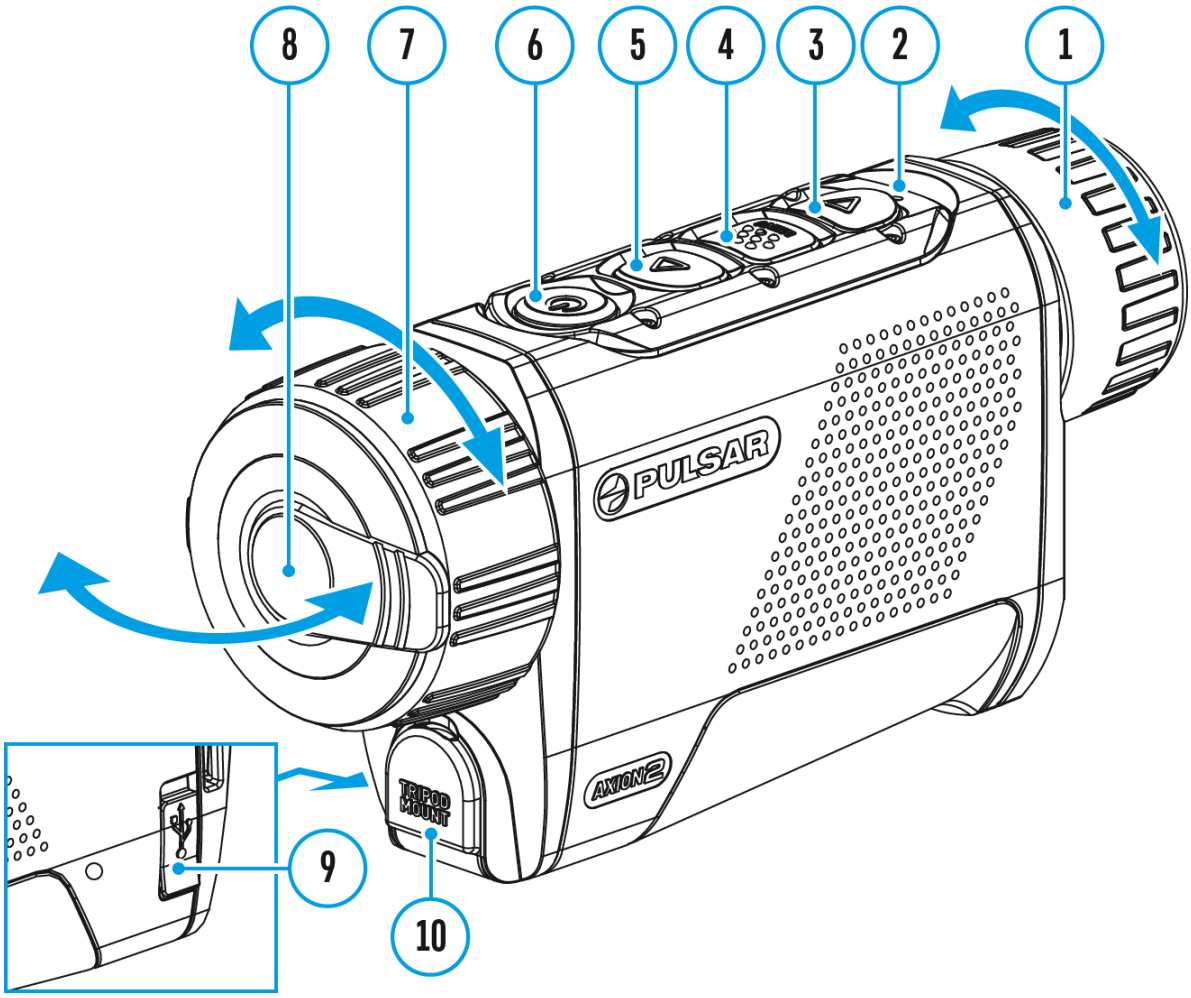

Sensitivity enhancement levels (Normal N, High H, Ultra U) are software algorithms that enhance the quality of detection and recognition in various observation conditions. When the temperature contrast decreases (fog, precipitation, high humidity), it is recommended to increase the amplification level. To optimize the image, activate the **Smoothing Filter**

in the main menu.

Normal



High



Ultra



Option 1:

Press the **UP**button **(5)** briefly to switch the amplification level.

Option 2:

1. Press and hold the **MENU (4)** button to enter the main menu.
2. Use the **UP (5)/DOWN (3)** buttons to select the **Amplification Level** icon.
3. Press the **MENU (4)** button briefly to enter the Amplification Level submenu.
4. Use the **UP (5)/DOWN (3)** buttons to select one of three amplifying levels of sensitivity (Normal , High , Ultra).
5. Press the **MENU (4)** button briefly to confirm the selection.

Colour Modes

Show device diagram

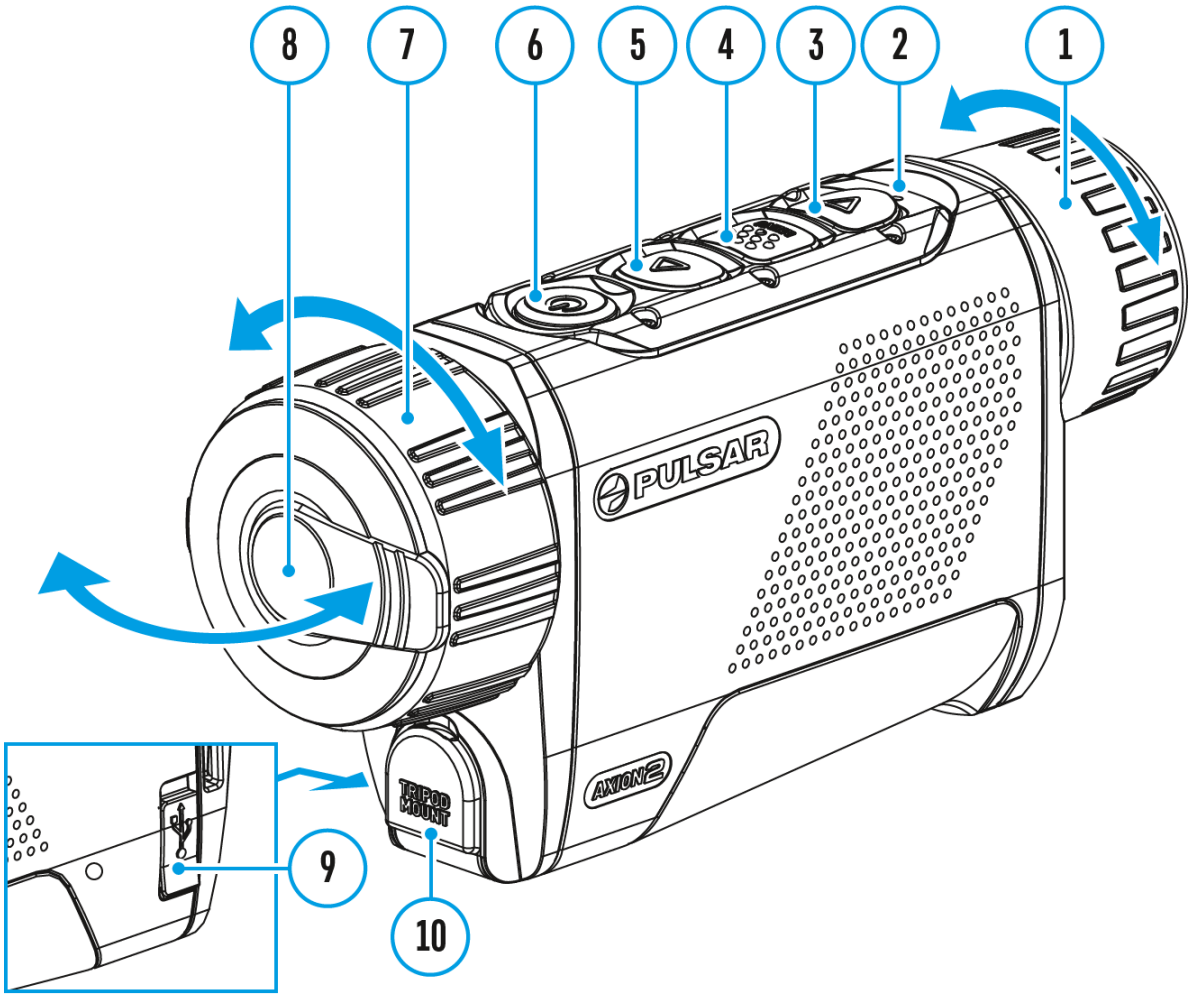

Colour palette selection.

White Hot is the default display mode.

To select an alternative palette, do the following:

1. Press and hold the **MENU (4)** button to enter the main menu.
2. Use the **UP (5)/DOWN (3)** buttons to select **Colour Modes** icon.
3. Press the **MENU (4)** button briefly to enter the submenu.
4. Use the **UP (5)/DOWN (3)** buttons to select the desired palette.
5. Press the **MENU (4)** button briefly to confirm the selection.

Tip: to preserve brightness and contrast values when switching palettes, activate **User Mode**.



- **Black hot** - a black and white palette where white = cold; black = hot
- **Red Hot**
- **Red Monochrome**

- **Rainbow**
- **Ultramarine**
- **Violet**
- **Sepia**

Attention!The device should not be used to accurately measure temperature. The images generated are based on temperature contrast rather than true temperature readings.

Smoothing Filter

Show device diagram

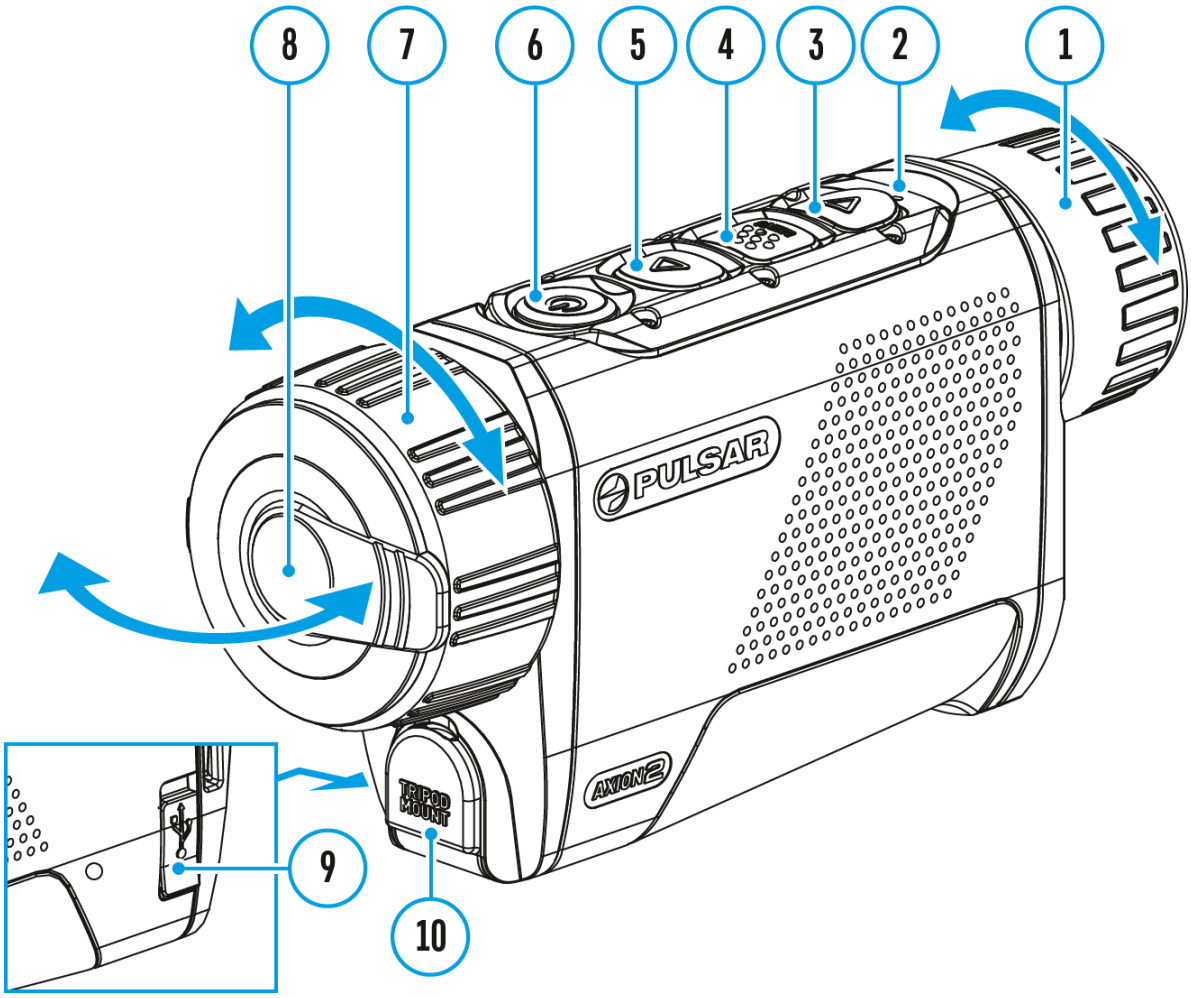

Used to reduce digital distortion while maintaining a high level of sensitivity.

Smoothing Filter Off



Smoothing Filter On



---

1. Press and hold the **MENU (4)** button to enter the main menu.
2. Use the **UP (5)/DOWN (3)** buttons to select the **Smoothing Filter** icon.

3. Press the**MENU (4)** button briefly to turn the filter on/off.

User Mode

Show device diagram

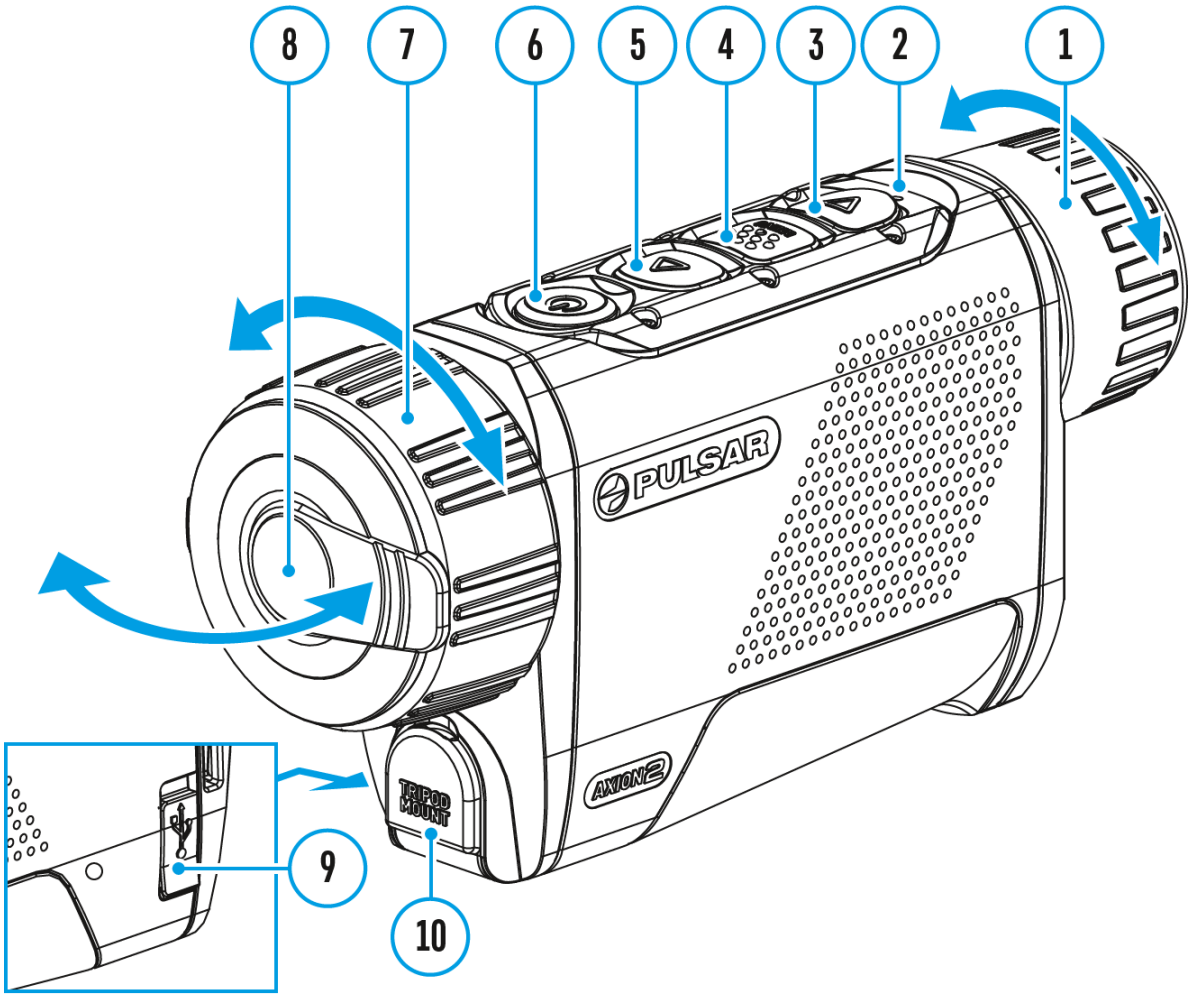

The User Mode function saves selected brightness and contrast settings in the device's memory providing optimal image quality for the next use of the thermal imager immediately, with no additional adjustments needed.

---

1. Press and hold the **MENU (4)** button to enter the main menu.

2. Use the **UP (5)/DOWN (3)** buttons to select the **User Mode**  icon.
3. Press the**MENU (4)** button briefly to turn the mode on/off.

Icon Brightness

Show device diagram

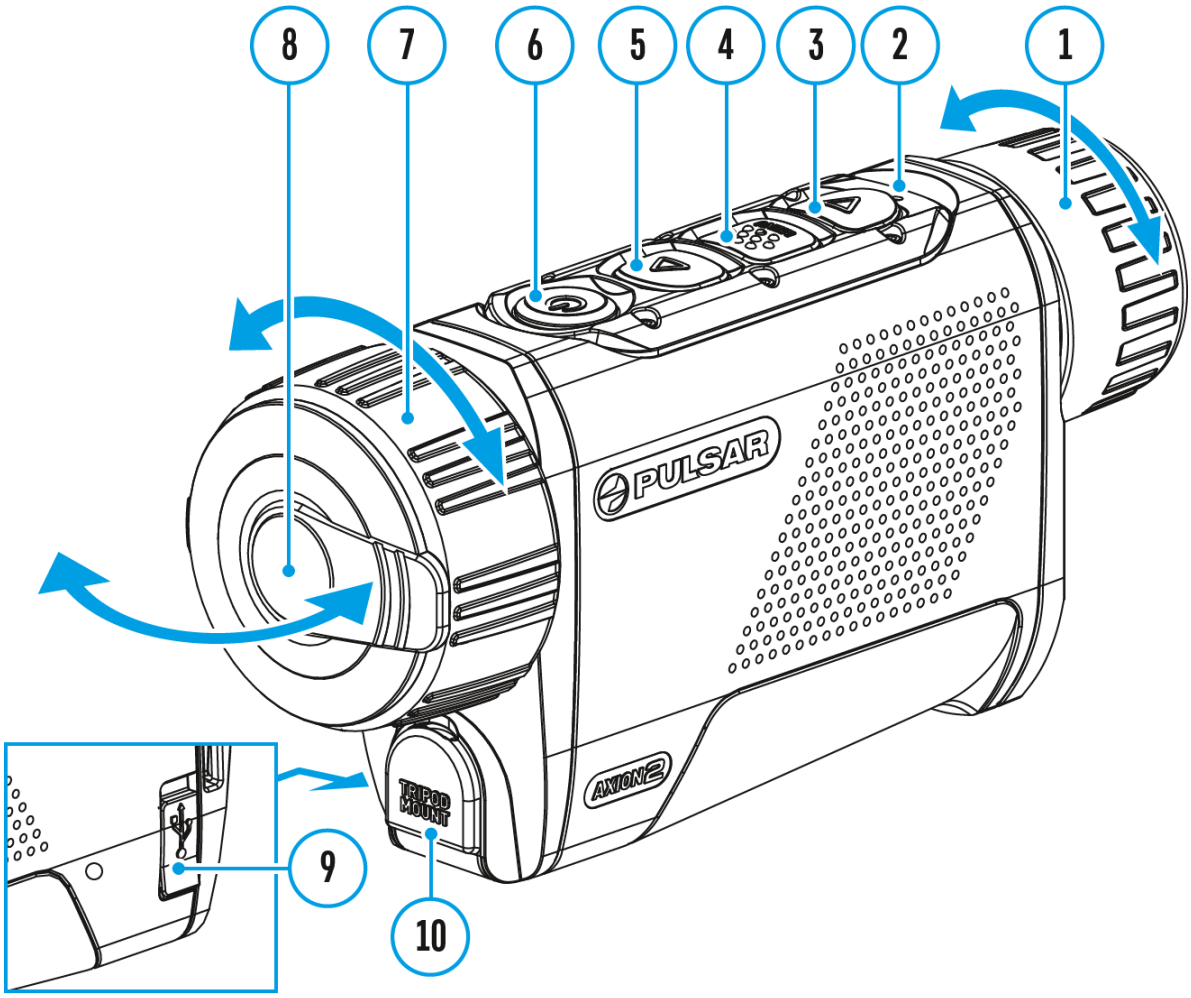

Adjust brightness level of the icons and screensavers (Pulsar, Display off) on the display.

1. Press and hold the **MENU (4)** button to enter the main menu.
2. Use the **UP (5)/DOWN (3)** buttons to select the **Icon Brightness** icon.
3. Press the **MENU (4)** button briefly to enter the submenu.

4. Use the **UP (5)/DOWN (3)** buttons to select the desired brightness level from 0 to 10.
5. Press the **MENU (4)** button briefly to confirm the selection.

PiP Mode

Show device diagram

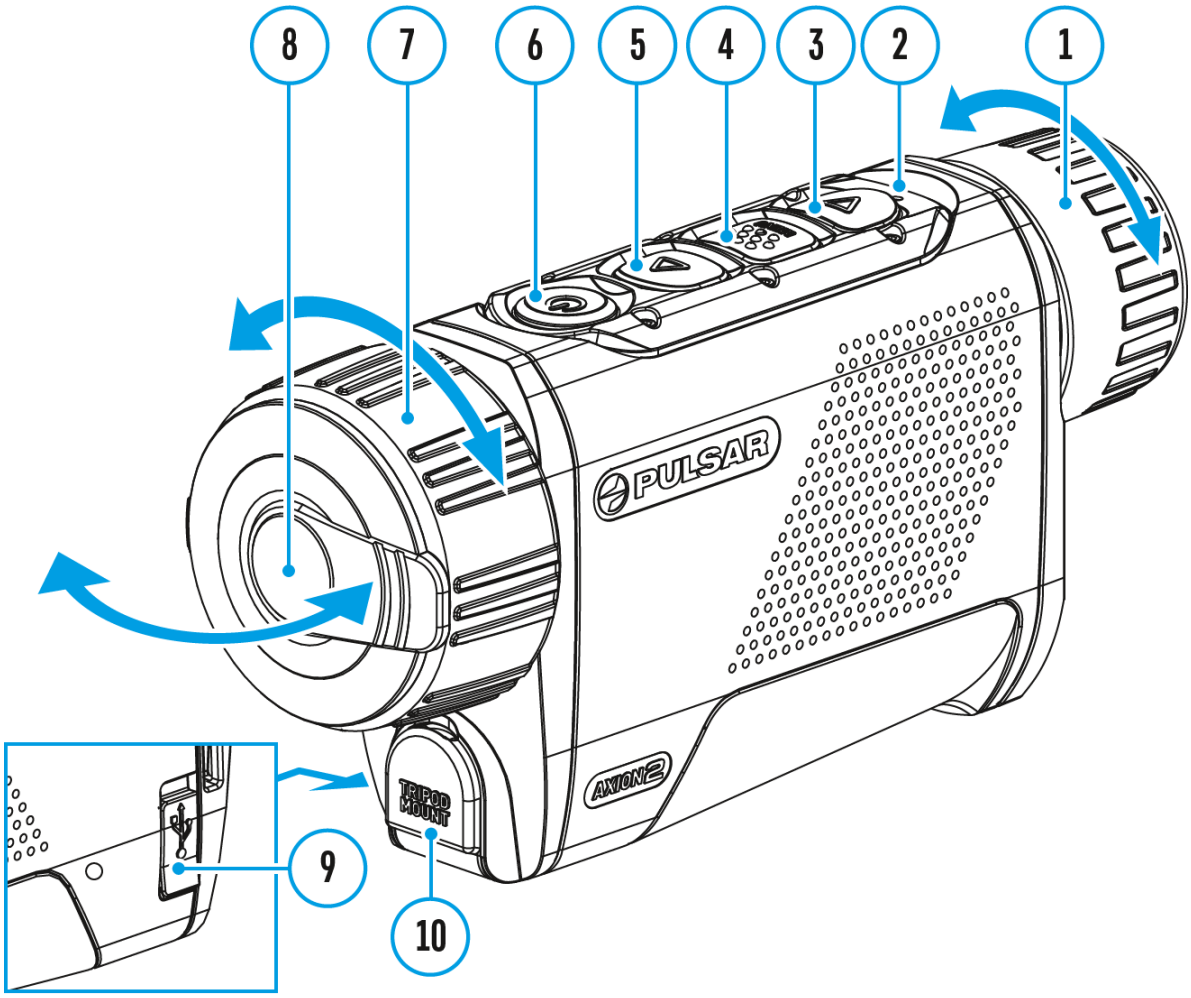

Picture in Picture mode

1. Press and hold the **MENU (4)** button to enter the main menu.
2. Use the **UP (5)/DOWN (3)** buttons to select the **PiP Mode** icon.
3. Press the **MENU (4)** button briefly to turn on/off.

Wi-Fi Activation

Show device diagram

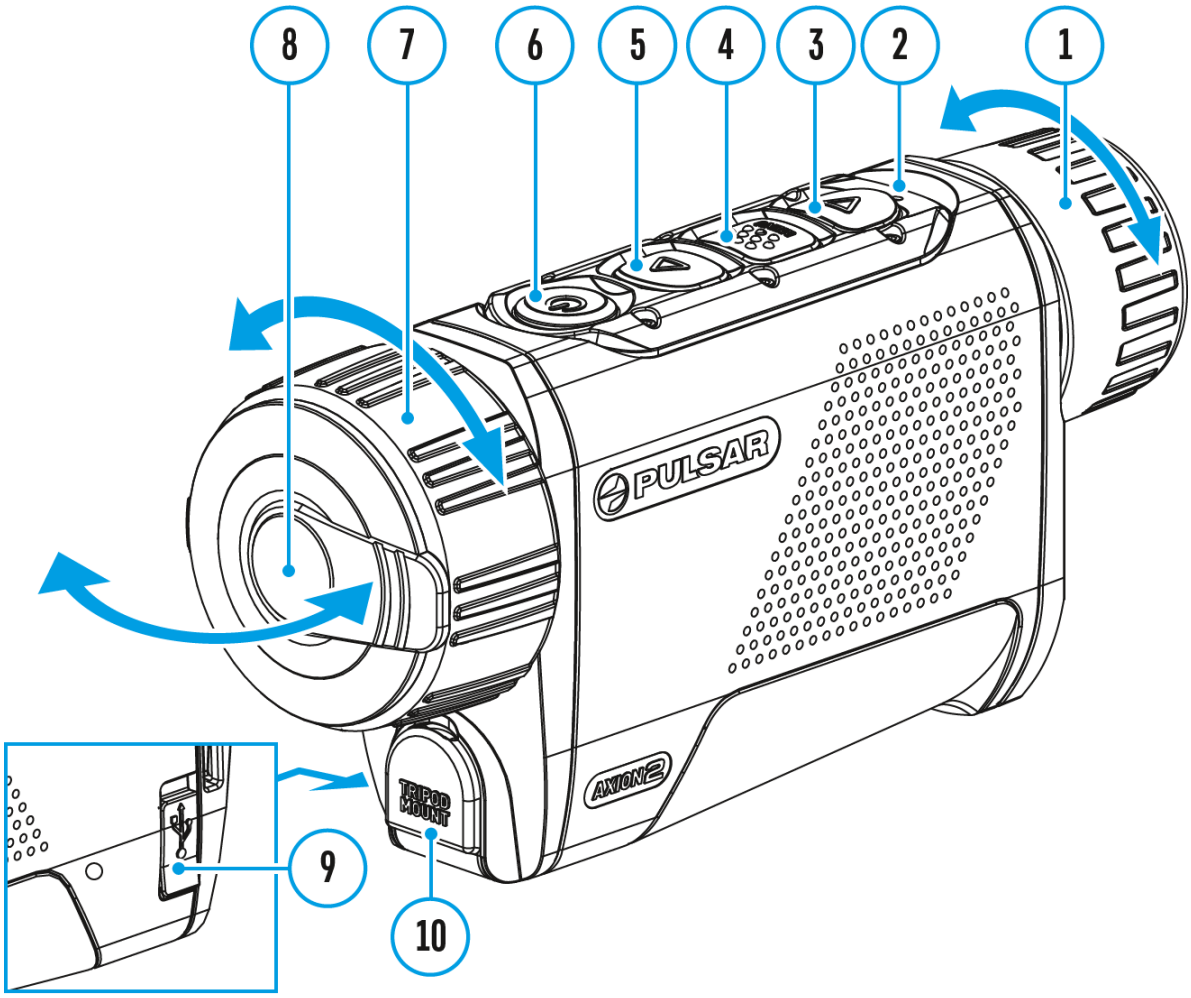

Turning Wi-Fi on/off

1. Press and hold the **MENU (4)** button to enter the main menu.
2. Use the **UP (5)/DOWN (3)** buttons to select the **Wi-Fi Activation** icon.
3. Press the **MENU (4)** button briefly to turn Wi-Fi on/off.

Wi-Fi Settings



Show device diagram

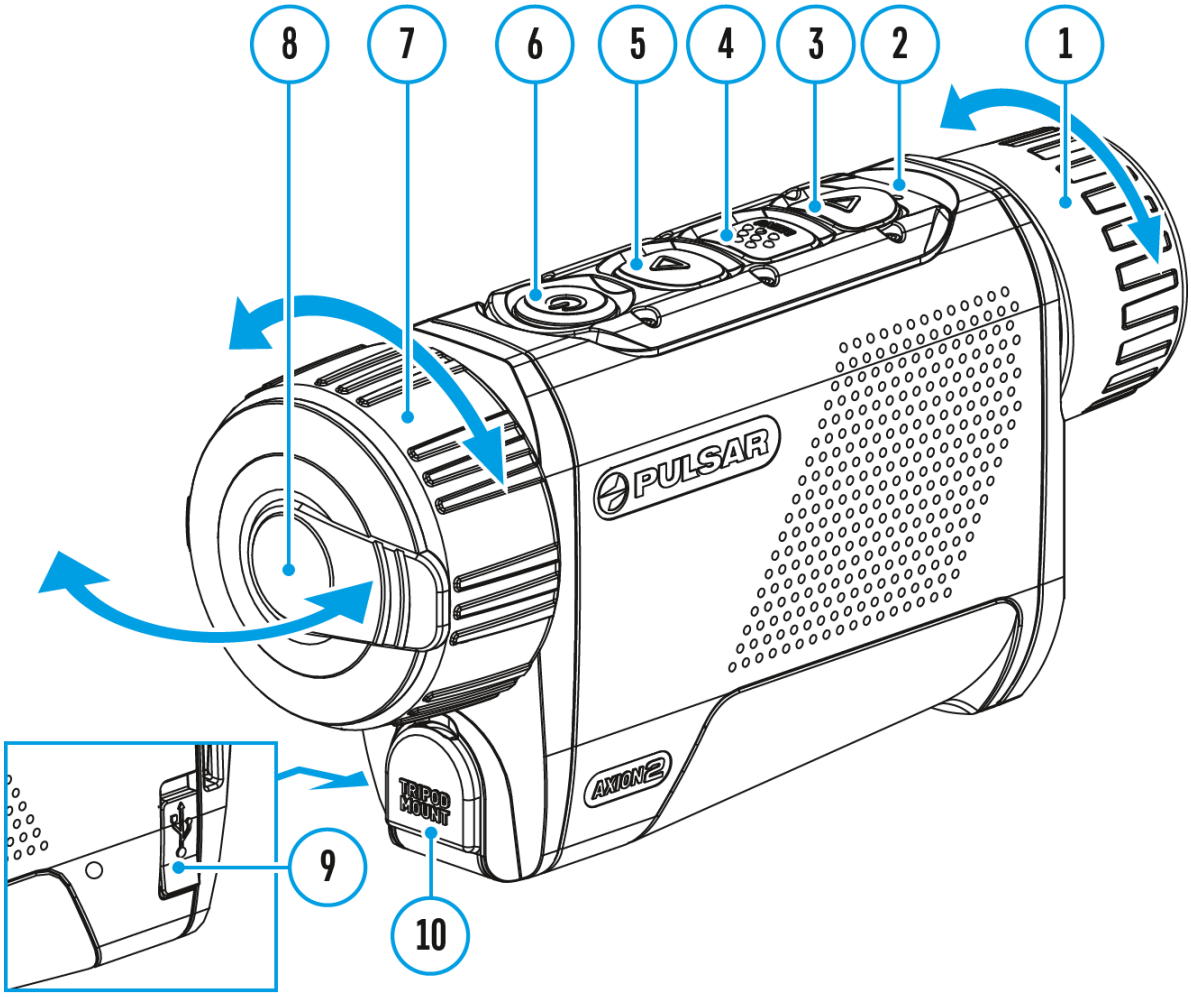

This item enables you to set up your device for operation in a Wi-Fi network.

1. Press and hold the **MENU (4)** button to enter the main menu.
2. Use the **UP (5)/DOWN (3)** buttons to select the **Wi-Fi Settings** icon.
3. Press the **MENU (4)** button briefly to enter the submenu.

Password Setup

This function enables you to set a password to access the scope from an external device. The password is used to connect an external device (i.e. smartphone) to your thermal imager.

1. Press the **MENU (4)** button briefly to enter the **Password Setup** PAS submenu**.**
2. The unique password only for your device will appear on the image.
3. Use the **UP (5)/DOWN (3)** buttons to set the desired password using the **UP (5)** button to increase and the **DOWN (3)** button to decrease the values.
4. Press the **MENU (4)** button to toggle between the digits.
5. Press and hold the **MENU (4)** button to save your password and exit the submenu.

Access Level Setup

This option allows you to configure the appropriate access level to your device made available to the Stream Vision 2 application.

- **Owner**level**.** A Stream Vision 2 user has full access to all device functions.
- **Guest**level**.**A Stream Vision 2 user only has access to the real time video stream from the device.

1. Press briefly the **MENU (4)** button to enter the **Access Level Setup** submenu.
2. Select the access level with the **UP (5)/DOWN (3)** buttons.
3. Press and hold the **MENU (4)** to confirm your selection and exit from the submenu.

Wi-Fi Band

This setting helps to solve smartphone connection issues in the following cases:

- If your smartphone does not support 5 GHz Wi-Fi band, switch to 2.4 GHz.
- Many Wi-Fi networks cause interference. In this case, switching between Wi-Fi bands can improve the connection between the device and the smartphone.

1. Press briefly the **MENU (4)** button to enter the **Wi-Fi Band** submenu.
2. Press the **UP (5)/DOWN (3)** buttons to select the Wi-Fi bandwidth – **5 GHz** or **2.4 GHz**.
3. Confirm your selection with a short press of the controller **MENU (4)** button.

Microphone

Show device diagram

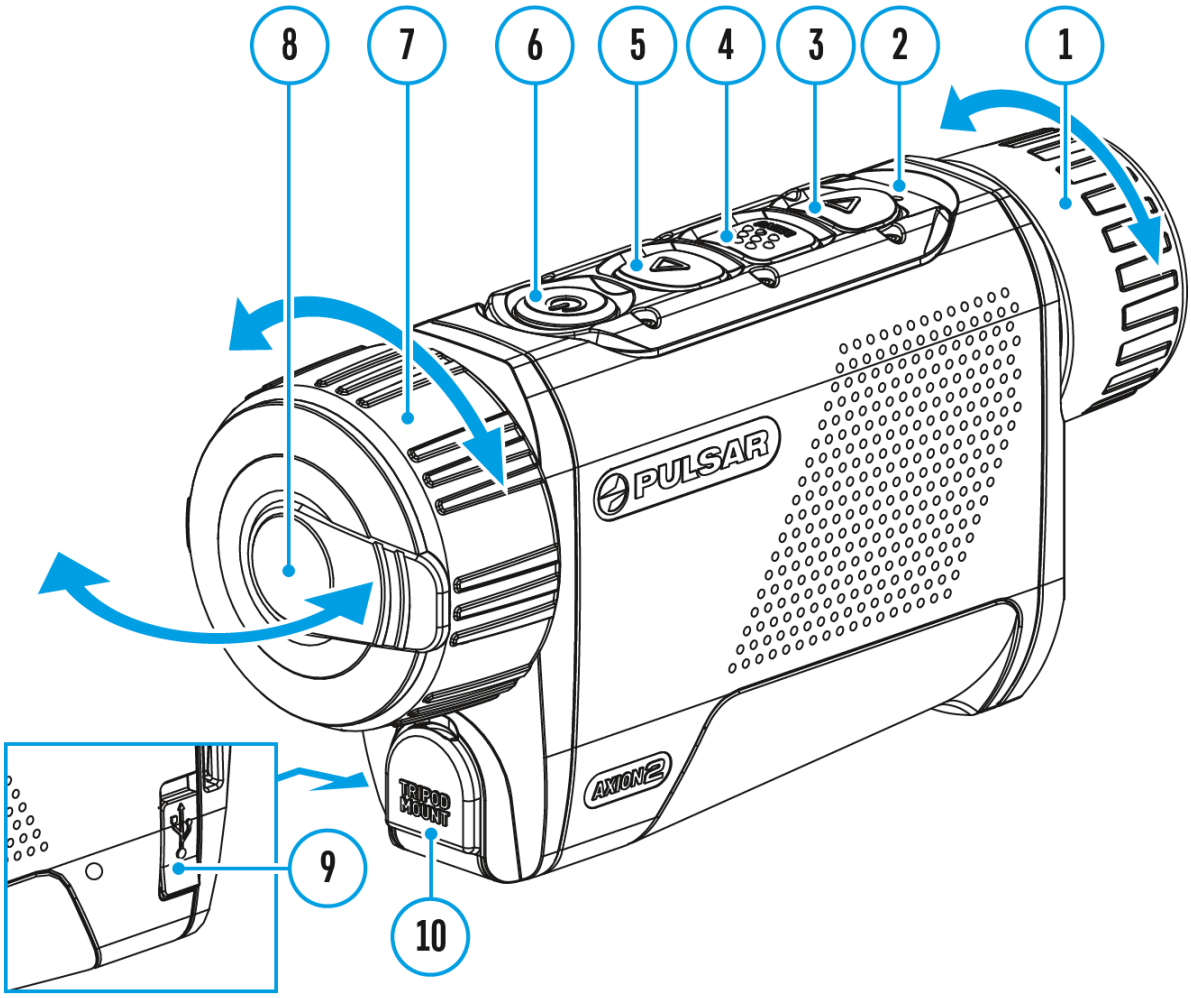

Turning microphone on/off

This item allows you to enable (or disable) the microphone for recording sound during video recording.

1. Press and hold the **MENU (4)** button to enter the main menu.
2. Use the **UP (5)/DOWN (3)** buttons to select **Microphone** icon.

3. Press the **MENU (4)** button briefly to turn on/off.

The microphone is off by default.

Calibration Mode

Show device diagram

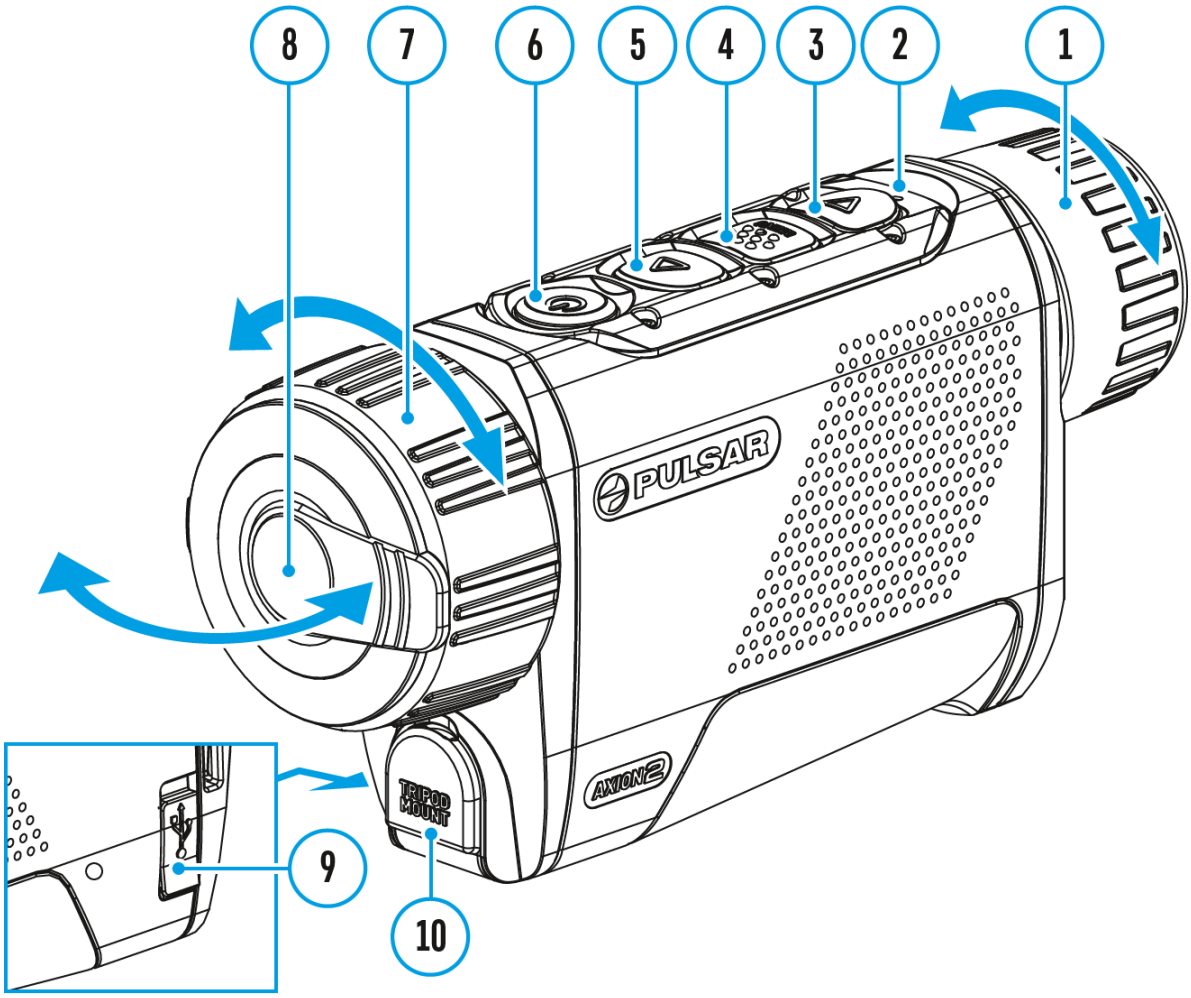

Calibration mode selection.

Calibration enables the device to equalize the microbolometer background temperature and eliminate the image flaws (such as vertical bars, phantom images, etc.).

There are three calibration modes: **Manual, Semi-Automatic** and **Automatic**

.

The selected calibration mode is displayed in the status bar (see **Status Bar** section).

Select the required mode in the Calibration Mode menu item:

1. Press and hold the **MENU (4)** button to enter the main menu.
2. Use the **UP (5)/DOWN (3)** buttons to select the **Calibration Mode**  icon.
3. Press the **MENU (4)** button briefly to enter the submenu.
4. Use the **UP (5)/DOWN (3)** buttons to select one of the calibration modes described below.
5. Press the **MENU (4)** button briefly to confirm the selection.

M mode (Manual)

- Close the lens cover **(8)**.
- Press the **ON/OFF (6)** button briefly.
- Open the lens cover **(8)** after the calibration is completed.

SA mode (Semi-Automatic)

- The user independently determines the need for calibration (according to the image being observed).
- Press the **ON/OFF (6)** button briefly to activate calibration.
- There is no need to close the lens cover because an internal shutter covers the microbolometer automatically.

A mode (Automatic)

- The device is calibrated autonomously according to firmware algorithms.
- There is no need to close the lens cover because an internal shutter covers the microbolometer automatically.
- In this mode, the user can still choose to calibrate the device using the **ON/OFF (6)** button if required (as in the **SA** mode).
- In Automatic calibration mode a countdown timer  will appear instead of the calibration mode icon 3 seconds before automatic calibration begins.

Notes:

- During calibration, the image on the display briefly freezes for up to 1 second.
- The selected calibration mode is saved after restarting the device.

General Settings

Show device diagram

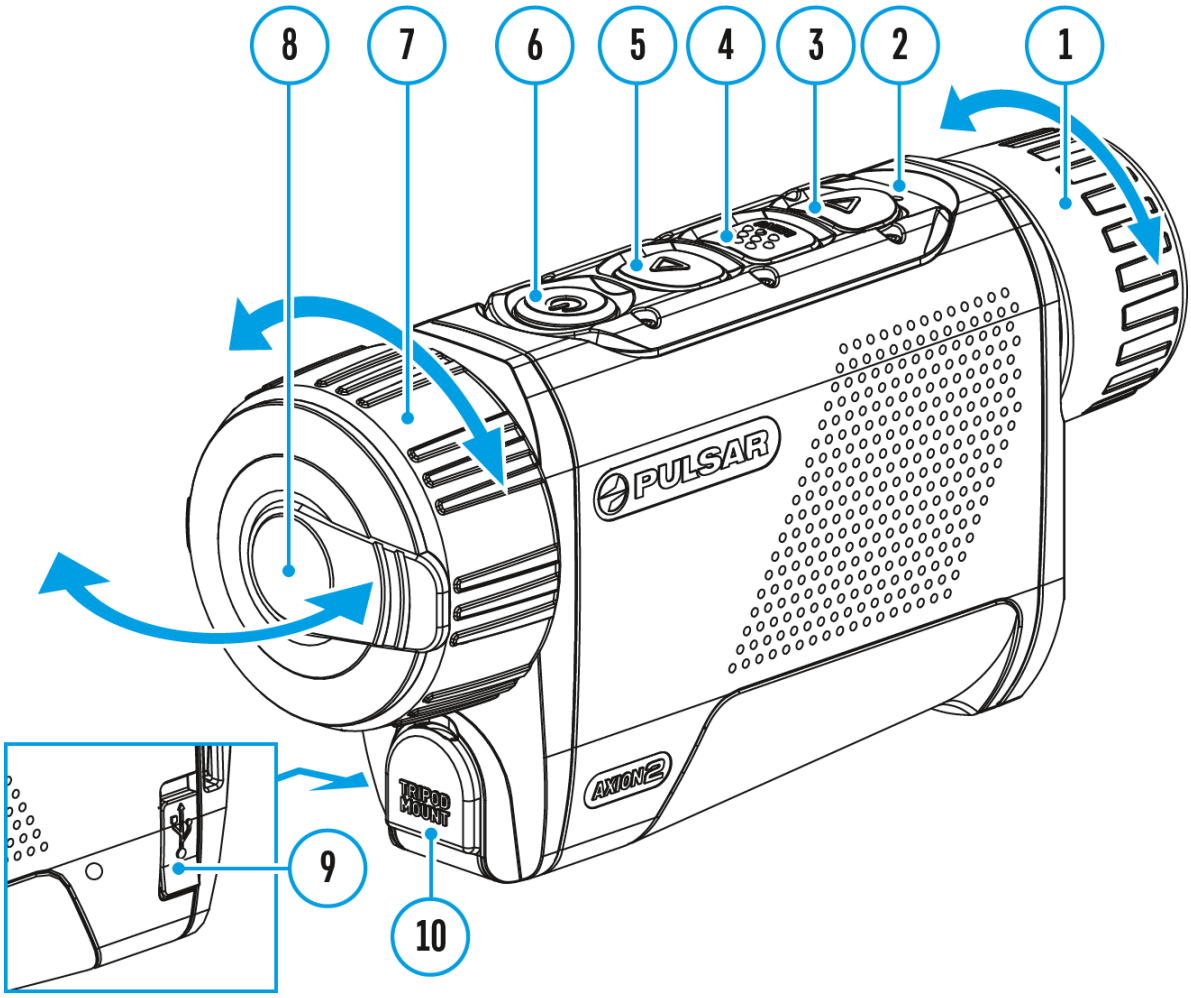

This menu section allows you to change the interface language, set the date, time, units of measure, return the device to factory default settings and perform memory card formatting.

1. Press and hold the **MENU (4)** button to enter the main menu.
2. Use the **UP (5)/DOWN (3)** buttons to select the **General Settings** icon.

3. Press the **MENU (4)** button briefly to enter the submenu.
4. Choose the required menu item with **UP (5)/DOWN (3)** buttons.

Language

Language selection

1. Press the **MENU (4)** button briefly to enter the **Language** menu item.
2. Use the **UP (5)/DOWN (3)** buttons to select one of the available interface languages: English, German, Spanish, French, Russian, Italian, Portuguese, Dutch, Danish, Norwegian, Swedish, Polish, Czech, Hungarian.
3. Press the **MENU (4)** button briefly to confirm the selection.
4. Press and hold the **MENU (4)** button to save your selection and exit from the submenu.

Date

Date setting

1. Press the **MENU (4)** button briefly to enter the **Date** menu item. The date is displayed in dd/mm/yyyy format.
2. Use the **UP (5)/DOWN (3)** buttons to select the desired year, month, and date. Press the **MENU (4)** button briefly to toggle between digits.
3. Press and hold the **MENU (4)** button to save the date and exit the submenu.

Time

Time setting

1. Press the **MENU (4)** button briefly to enter the **Time** menu item.
2. Select the time format (24-hour clock or AM / PM) by pressing the **UP (5)/DOWN (3).**
3. Press the **MENU (4)** button to select the hours.
4. Press the **UP (5)/DOWN (3)** buttons to select the hour value.

5. Press the **MENU (4)** button to select the minutes.
6. Press the **UP (5)/DOWN (3)** buttons to select the minute value.
7. Press and hold the **MENU (4)** button to save the time and exit the submenu.

Units of Measure

Rangefinder units of measure

1. Press the **MENU (4)** button briefly to enter the **Units of Measure**  menu item.
2. Press the **UP (5)/DOWN (3)** buttons to select either Meters or Yards as the unit of measure.
3. Press the **MENU (4)** button briefly to confirm your selection.
4. Exit from the submenu will happen automatically.

Video Compression

Only in XG model

When set to ON, standard video compression is applied so the video file size is reduced.

When set to OFF, minimal video compression is applied. In this case, the quality of the recorded video is better, but its size is significantly increased.

Warning! Larger video file sizes result in shorter recording times. This may lead to longer download times for video files through the Stream Vision 2 app.

Enable/disable video compression:

1. Select the **Video Compression** menu item with the **UP (5)/DOWN (3)** buttons.
2. To turn on video compression, briefly press the **MENU (4)** button.


3. To turn off video compression, briefly press the **MENU (4)** button.


Default Settings

Factory reset

1. Press the **MENU (4)** button briefly to enter the **Default Settings** menu item.
2. Use the **UP (5)/DOWN (3)** buttons to select Yes to restore default settings or *No*to cancel.
3. Confirm your selection with a short press of the **MENU (4)**

- If *Yes*is selected, display will show "*Do you want to restore default settings?*" with *Yes*and *No* dialogue options. Select *Yes*to restore the default settings.
- Selecting the *No*option will cancel the reset and exit the submenu.

The following settings will be returned to their defaults before being changed by the user:

- **Video Recorder Mode** – Video
- **Amplification Level** – Normal
- **Smoothing Filter**– Off
- **User Mode**- Off
- **Calibration Mode** – Automatic
- **Language** – English
- **Microphone** - Off
- **Wi-Fi** – Off (unique password)
- **Magnification** – Standard (without digital zoom)
- **PiP** – Off
- **Colour Mode** – White Hot
- **Units of Measure** – Meters
- **Video Compression** – Off (only in XG model)

- **Wi-Fi Band –**2.4 GHz

Attention!When restoring the factory defaults the date, time and user pixel map are saved.

Format

This function enables you to format the Flash memory card. All files will be deleted.

Formatting should be carried out in case of a memory card error.

Before formatting, make sure you transfer all footage to other media.

1. Press the **MENU (4)** button briefly to enter the **Format** **.**
2. Use the **UP (5)/DOWN (3)** buttons to select *Yes*to format the memory card or *No*to return to the submenu.
3. Press the **MENU (4)** button briefly to confirm your selection.

- If*“Yes”* is selected, display will show *“Do you want to format memory?”* with *“Yes”* and *“No”* dialogue options. Select *Yes*to format the memory card.
- Selecting the *No*option will cancel the formatting and exit the submenu.

Defective Pixel Repair

Show device diagram

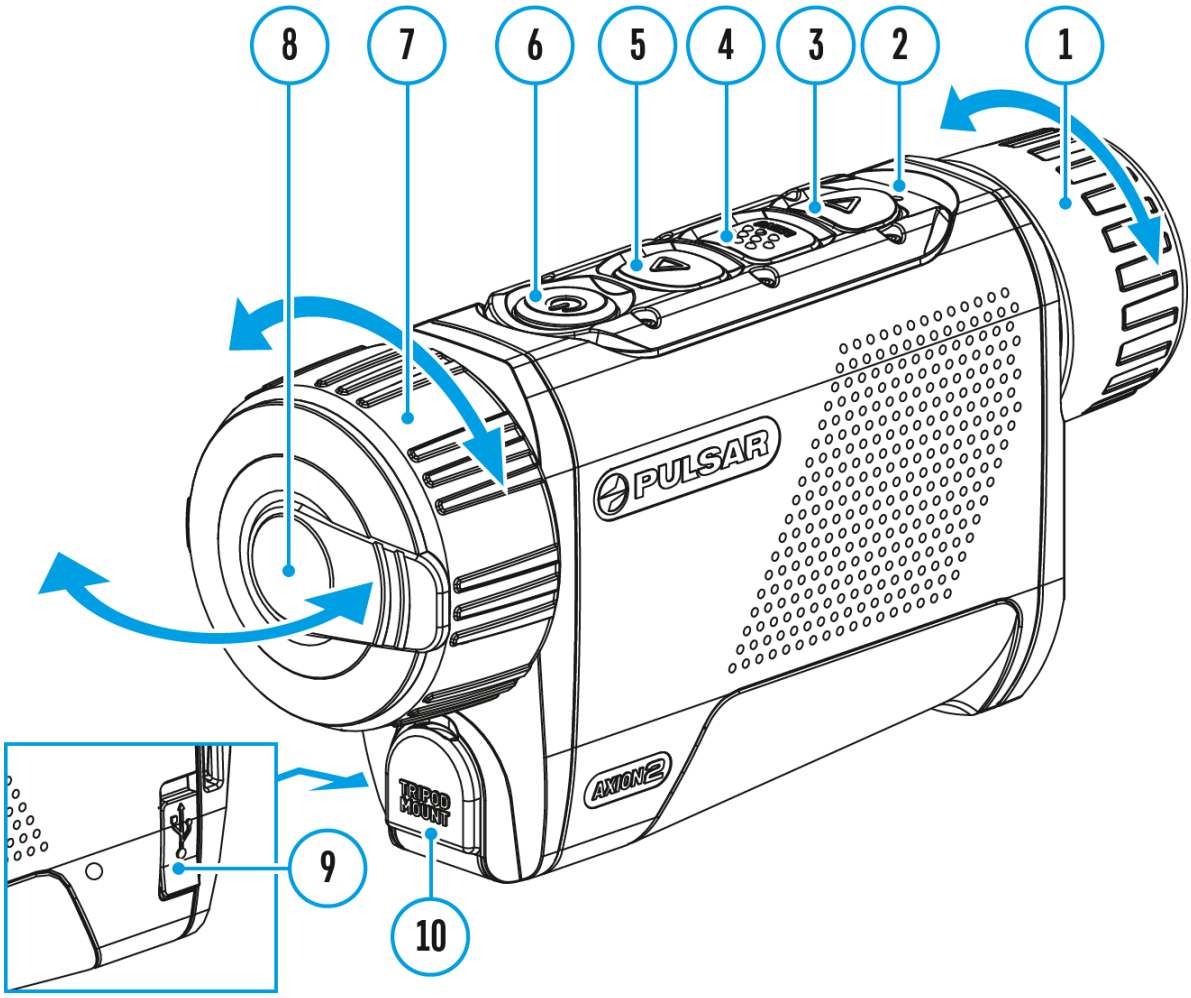

When using the device, defective (dead) pixels may appear on the microbolometer. These are bright or dark points of constant brightness that are visible on the image.

Defective pixels on the microbolometer can increase in size relative to the digital-zoom power.

Axion 2thermal monoculars allows the user to remove any defective pixels on the display, as well as cancel removal, via the device’s firmware.

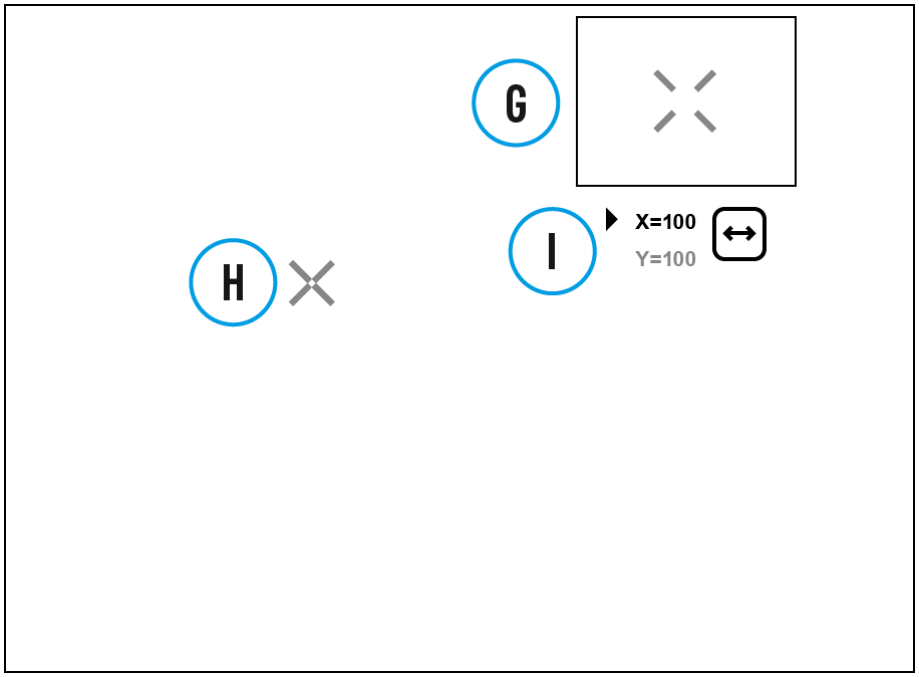

Step 1. Enter the menu to fix the defective pixels

1. Press and hold the **MENU (4)** button to enter the main menu.
2. Use the **UP (5)/DOWN (3)** buttons to select the **Defective Pixel Repair** menu item.
3. Press briefly the **MENU (4)** to open the submenu.
4. Select the **Defective Pixel Repair** option by briefly pressing the **MENU (4)** button.

Step 2. Select the defective pixel

1. A marker **(H)** appears on the left side of the display.
2. On the right side of the display appears a "magnifying glass" **(G)** - a magnified image in the frame with a fixed cross , designed for easier detection of a defective pixel and to match the pixel with the marker, and horizontal and vertical arrows for X and Y axes **(I)** showing the marker's movement.
3. With a short press of the **UP (5)/DOWN (3)** buttons move the marker to align it with a defective pixel.
4. Switch the direction of the marker from horizontal to vertical and vice

versa with a short press of the **MENU (4)** button**.**

5. Align the defective pixel with the fixed cross in the frame - the pixel should disappear.

Step 3. Remove the defective pixel

1. Delete the defective pixel with a short press of the **ON/OFF(6).**
2. Once the pixel has been successfully deleted an"*OK*" message will briefly appear on the screen.
3. You can then delete another defective pixel by moving the marker across the display.
4. Exit the Defective Pixel Repair submenu with a long press of the **MENU (4).**

Warning! The display of a thermal imager may have 1- 2 pixels represented as bright white or coloured (blue, red) dots which cannot be deleted and are not a defect.

Restore Default Pixel Map

Show device diagram

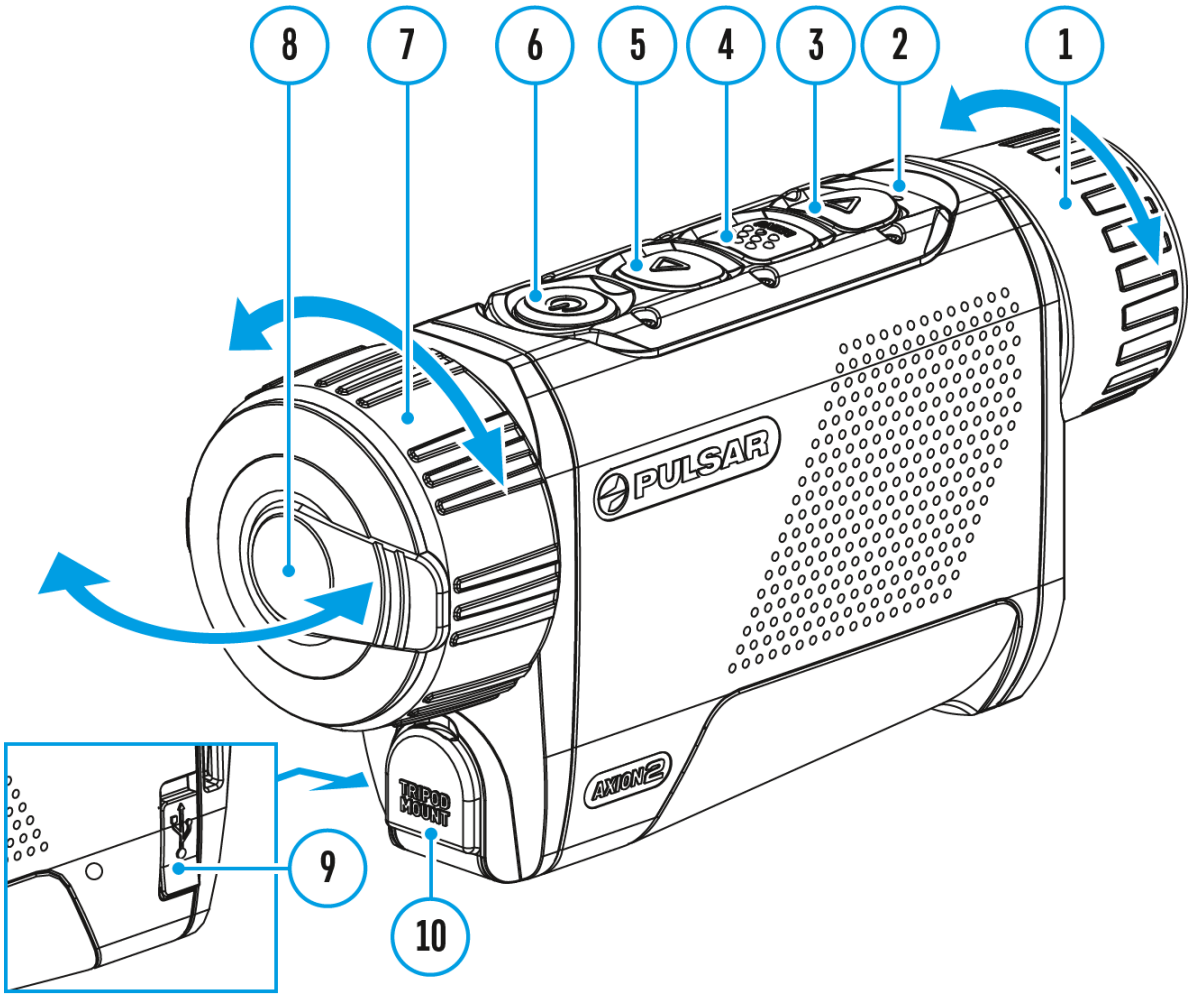

This option allows the user to return all previously disabled defective pixels to their original state.

1. Press and hold the **MENU (4)** button to enter the main menu.
2. Use the **UP (5)/DOWN (3)** buttons to select the **Defective Pixel Repair** icon.
3. Press the **MENU (4)** button to enter the submenu.

4. Use the **UP (5)/DOWN (3)** buttons to select the **Restore Default Pixel Map**  icon.
5. Activate the function by briefly pressing the **MENU (4)**.
6. Using the **UP (5)/DOWN (3)** buttons, select *Yes*if you want to return to the factory pixel map and select *No*if you do not.
7. Confirm your selection with a short press of the **MENU (4)**.

Device Information

Show device diagram

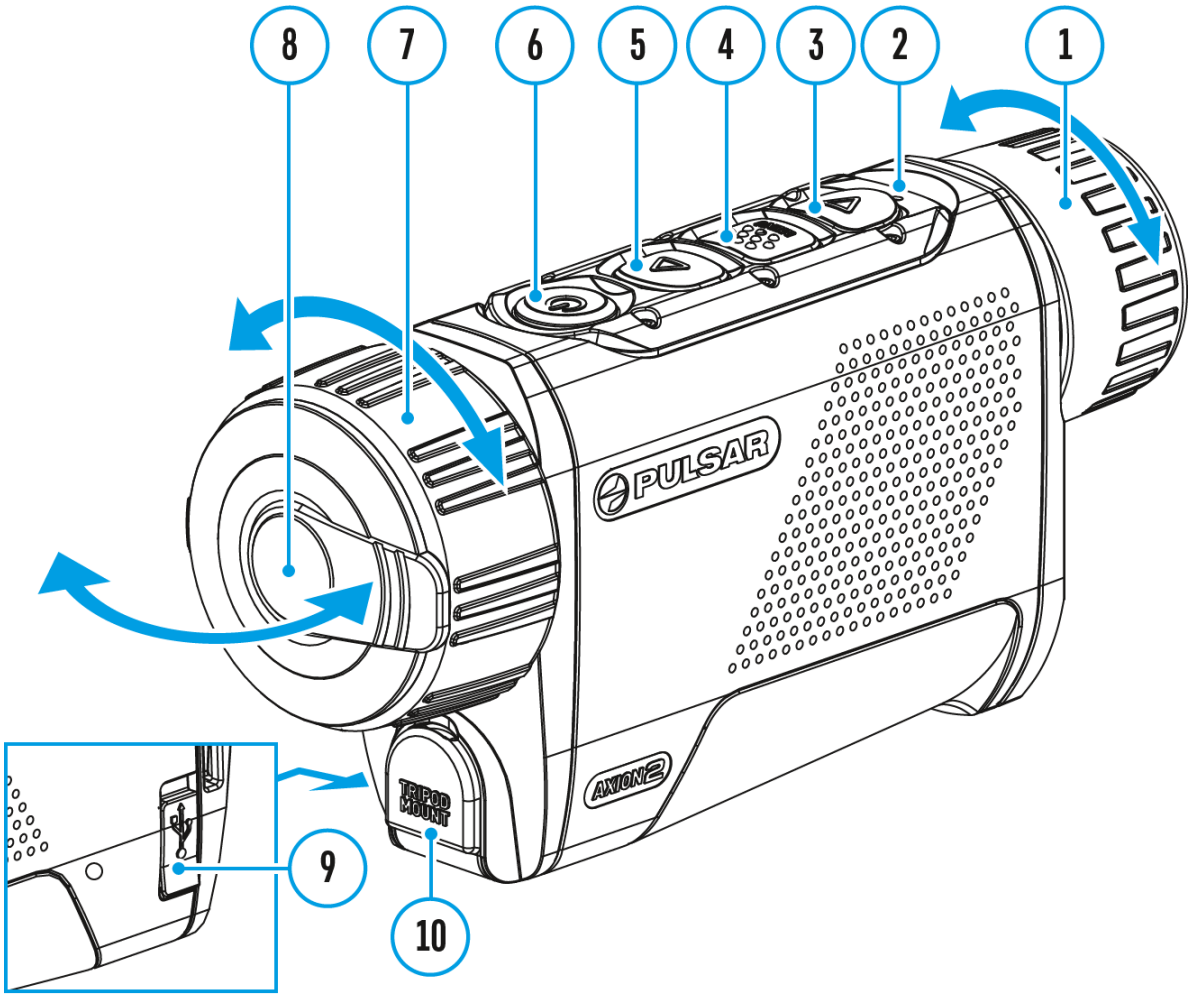

This menu item allows the user to view the following information about the device:

- SKU Number
- Firmware Version
- Device Name
- Hardware Version

- Device Serial Number
- Service Information

To display information, do the following:

1. Press and hold the **MENU (4)** button to enter the main menu.
2. Use the **UP (5)/DOWN (3)** buttons to select the **Device Information**  icon.
3. Press the **MENU (4)** button briefly to view/exit the information.

Video Recording and Photography

Show device diagram

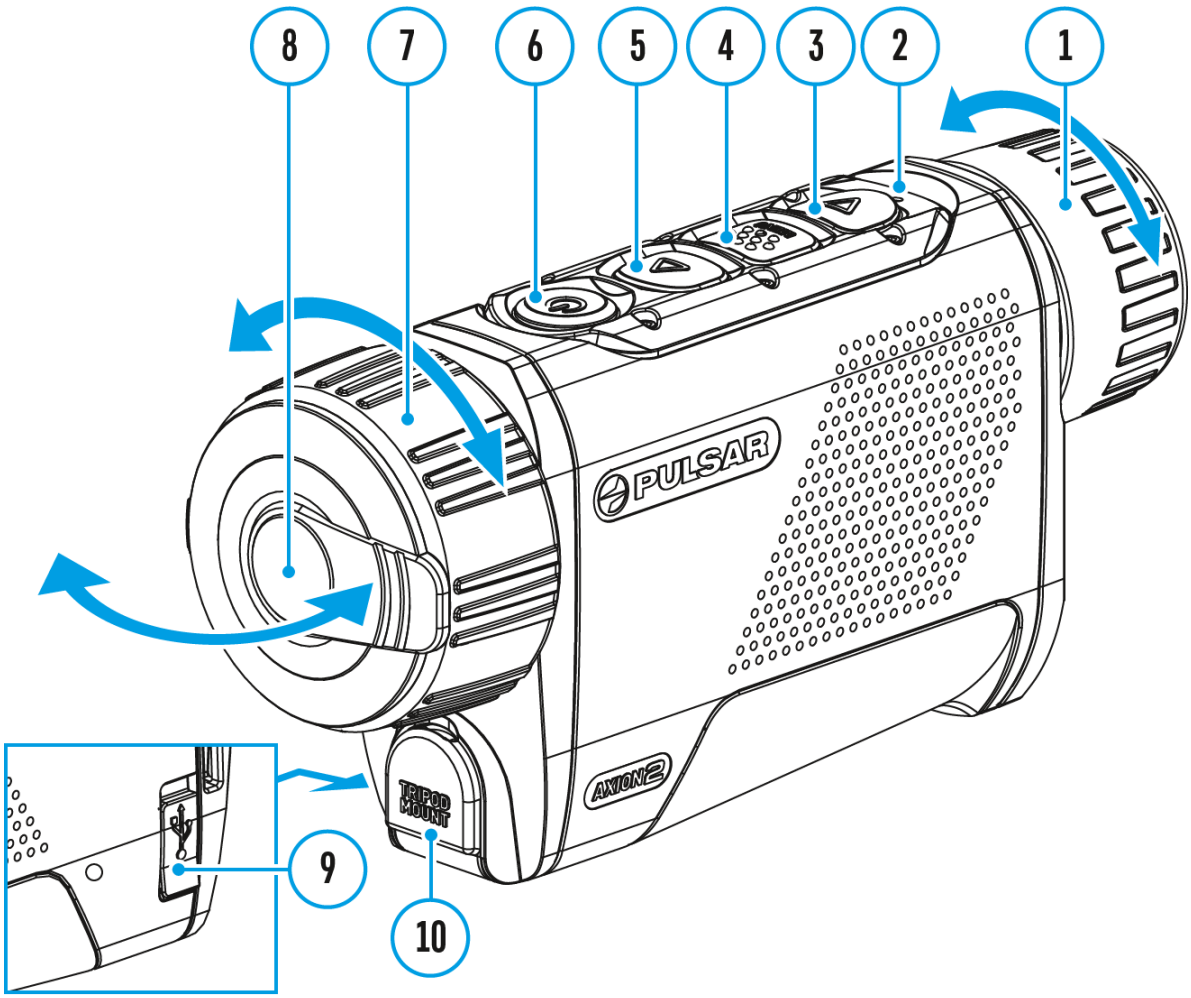

Axion 2thermal imagers are capable of video recording and photography. Videos and images are saved on the built-in memory card.

Before using this feature please set the **date** and **time** (see **General Settings** section).

For information on how to watch recorded photos and videos, see the Stream Vision 2 user manual: **Android**, **iOS**.

The built-in recorder operates in two modes **– Video** and **Photo.**

Video mode. Video recording

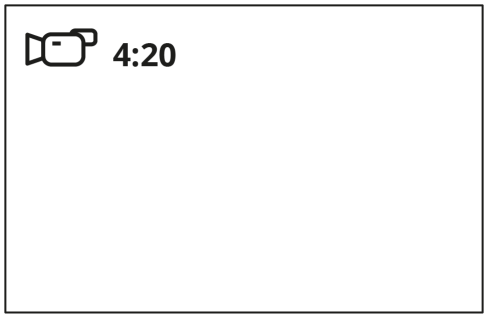

1. Switch to **Video** mode by pressing and holding the **DOWN/REC (3)** button.

2. The icon and the remaining recording time in HH:MM (Hours:Minutes) format are displayed in the upper left corner, for example 4:20.

3. Press the **DOWN/REC (3)** button briefly to start video recording.

4. When the video recording starts, the icon will disappear and the REC icon and timer in MM:SS (Minutes:Seconds) format will appear REC 00:25.

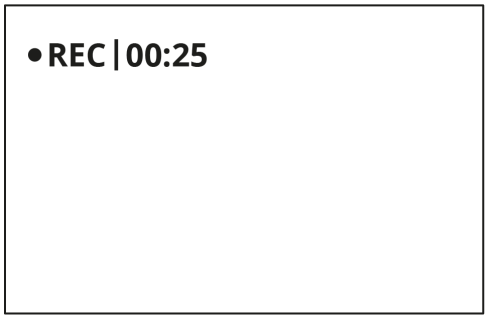

5. Pause and resume recording video with a short press of the **DOWN/REC (3)** button.

6. Stop recording video with a long press of the **DOWN/REC (3)**button.

7. Video files are saved to the built-in memory card after the video recording has been stopped.

8. Press and hold the**DOWN/REC (3)** button to switch between the **Video** and **Photo**modes (Video-> Photo-> Video…).

Photo Mode. Capturing an image

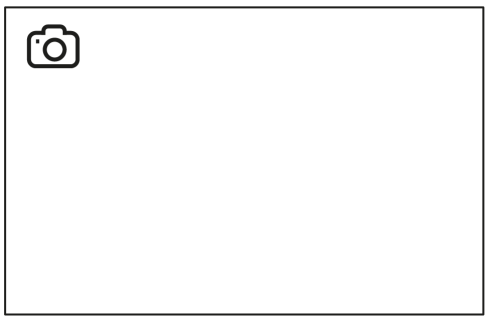

1. Switch to the **Photo**mode by pressing and holding the **DOWN/REC (3)** button.

2. Press the **DOWN/REC (3)** button briefly to take a photo. The icon flashes – the photo file is being saved to the built-in SD card.

Notes:

- You can enter and operate the menu during video recording.
- Recorded videos and photos are saved to the internal memory card in the format img_xxx.jpg (photos), video_xxx.mp4 (videos).
- Videos are recorded in clips with a maximum duration of 5 minutes. The number of recorded files is limited by the capacity of unit’s internal memory.
- Regularly check the free capacity of the internal memory and move recorded footage to other storage media to free up space on the internal memory card.
- In case of a memory card error, you can use the format function in the **General Settings** section of the main menu.
- When the Display Off function is activated, video recording continues to run in the background.

Discrete Digital Zoom

Show device diagram

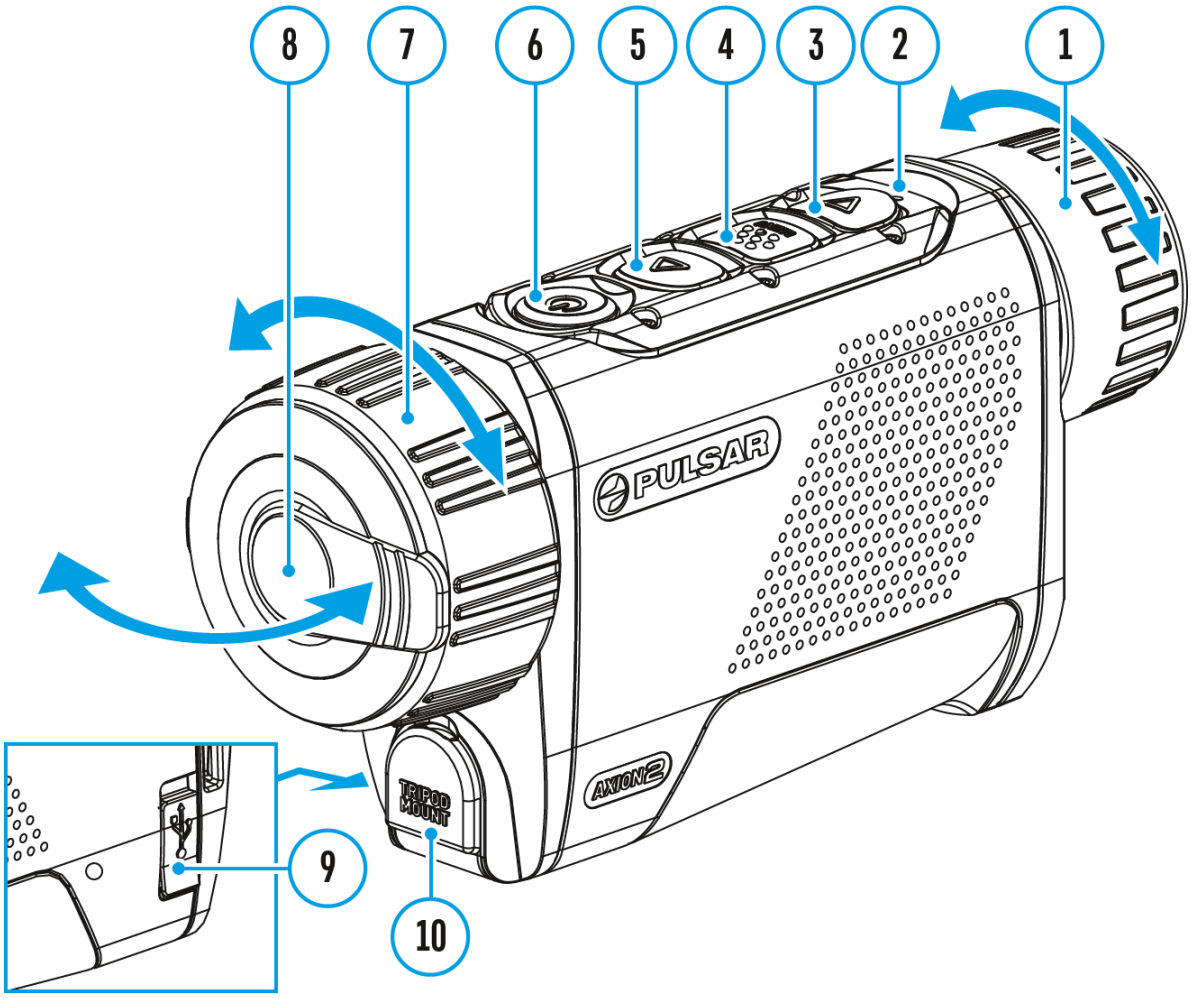

The device functionality allows you to quickly increase the base magnification by 2 or 4 times as well as return to the base magnification.

Note: the magnification value is reset to the base value when the device is switched off

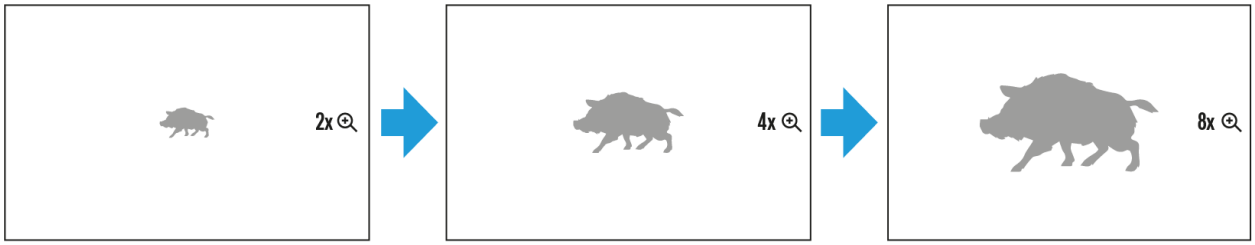

Press and hold the**UP/ZOOM (5)** button to change the digital zoom.

PiP Function

Show device diagram

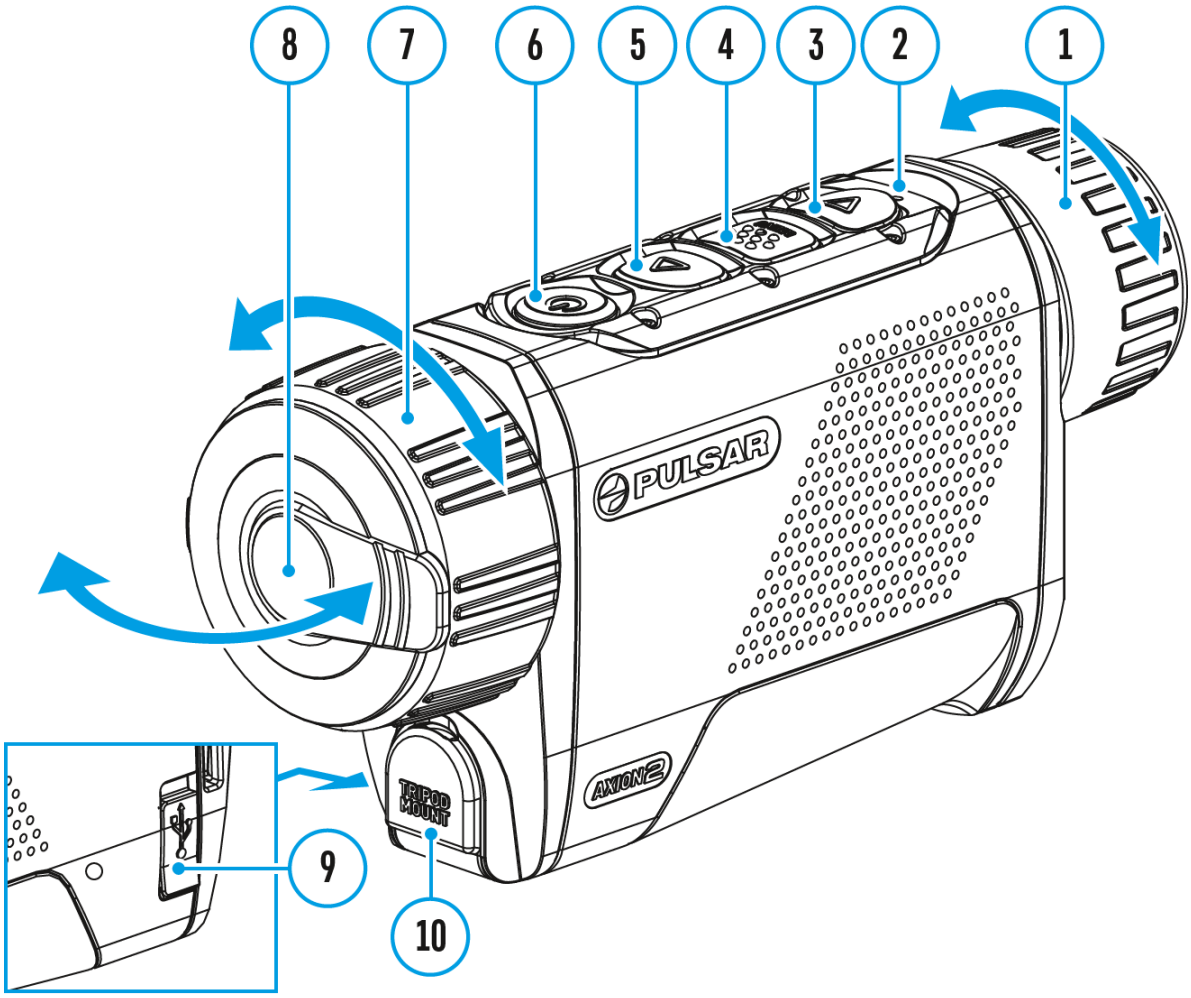

The **PiP** (Picture-in-Picture) function allows you to see both the main image and a magnified image in a dedicated window.

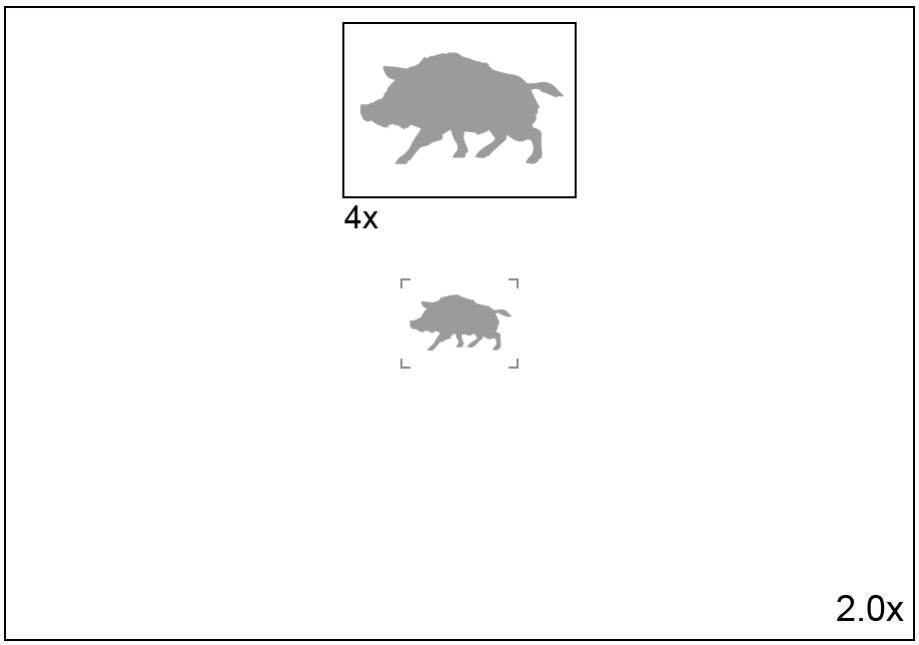

- To turn on and off the **PiP** function see the **PiP Mode** section.
- Press and hold the **UP (5)** button to change the magnification ratio in the **PiP**window.
- The zoomed image is displayed in a dedicated window, while the image in the rest of the screen is displayed at base magnification (2x).
- When the **PiP** is turned on you can control both the discrete and smooth digital zoom. In this case the zoom value changes only take place in the dedicated window.
- When the **PiP** function is turned off, the screen will display at the magnification that was set in **PiP**mode.

Display-Off Function

Show device diagram

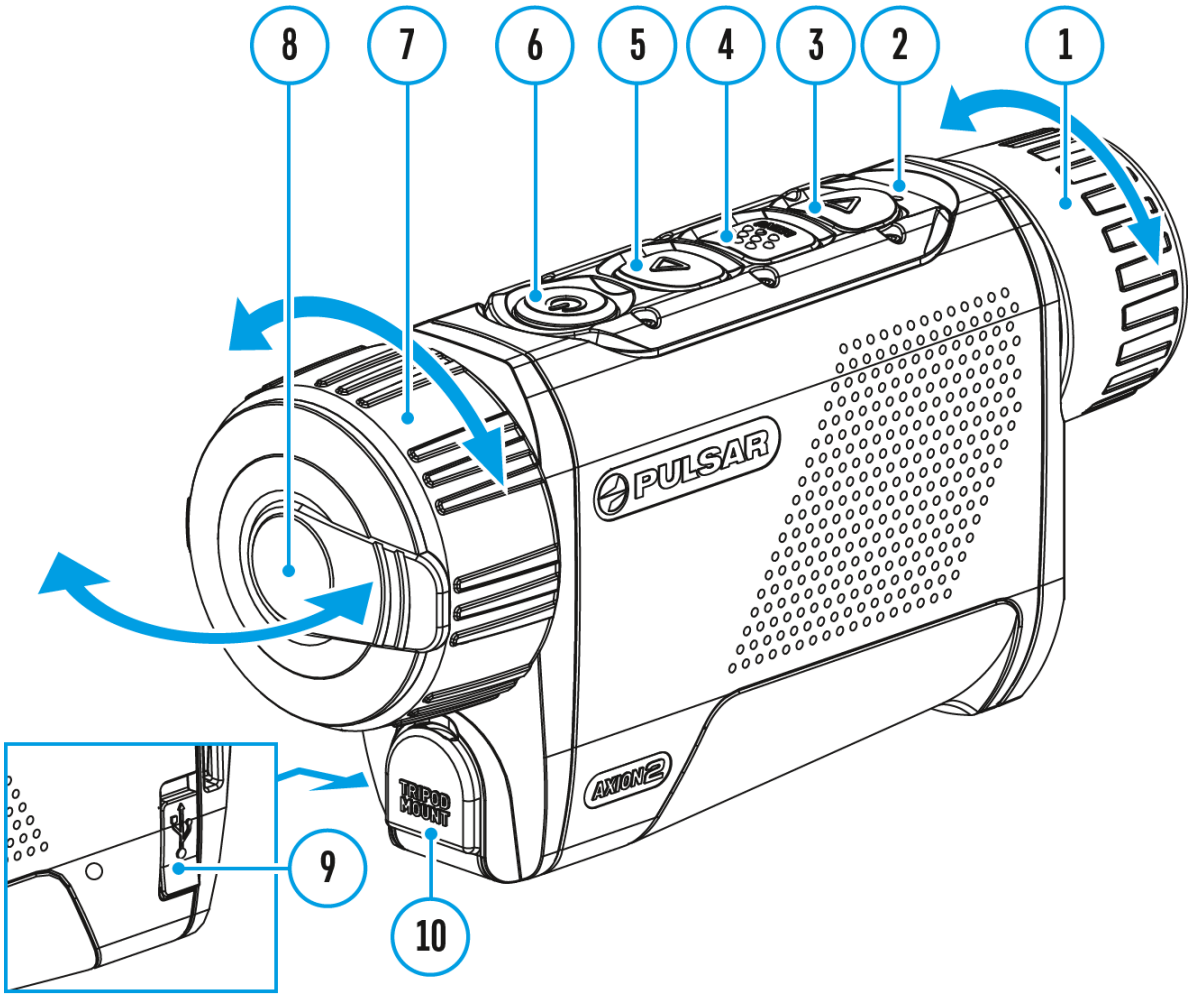

This function darkens the screen, which aids the user’s concealment. However, the device stays on.

When this function is in use, the device switches to the standby mode, which allows it to be switched on instantly.

00:03

1. When the device is on, press and hold the **ON/OFF (6)** button. The display will turn off, the current time and the **"Display off"**icon will appear.
2. Turn the display back on with a short press of the**ON/OFF (6)** button.
3. When you press and hold the **ON/OFF (6)** button, the display shows the **"Display off"** icon with a countdown. Pressing & holding the button down for the duration of the countdown will power the device off completely.

Wi-Fi Function

The device has a function enabling wireless communication with external devices (smartphone or tablet) via Wi-Fi.

- Turn on the wireless module in the **WI-Fi Activation**  menu option.

Wi-Fi is displayed in the status bar as follows:

Indication on the status bar	Connection Status
	Wi-Fi is switched off
	Wi-Fi connection is in progress
	Wi-Fi is switched on, no connection with device
	Wi-Fi is switched on, device connected

- The device is recognized by an external device as AXION2_XXXX where XXXX are the four last digits of the serial number.
- After entering the password on a mobile device (see **Password Setup** subsection of the **Wi-Fi Settings** section for more information on setting a password) and setting up a connection, the icon  in the status bar will change to .
- The Wi-Fi function will turn off automatically if there is not enough battery power for Wi-Fi. The battery icon will turn red  and flash. To use the Wi-Fi function again, you need to charge the battery.

Stadiametric Rangefinder

Show device diagram

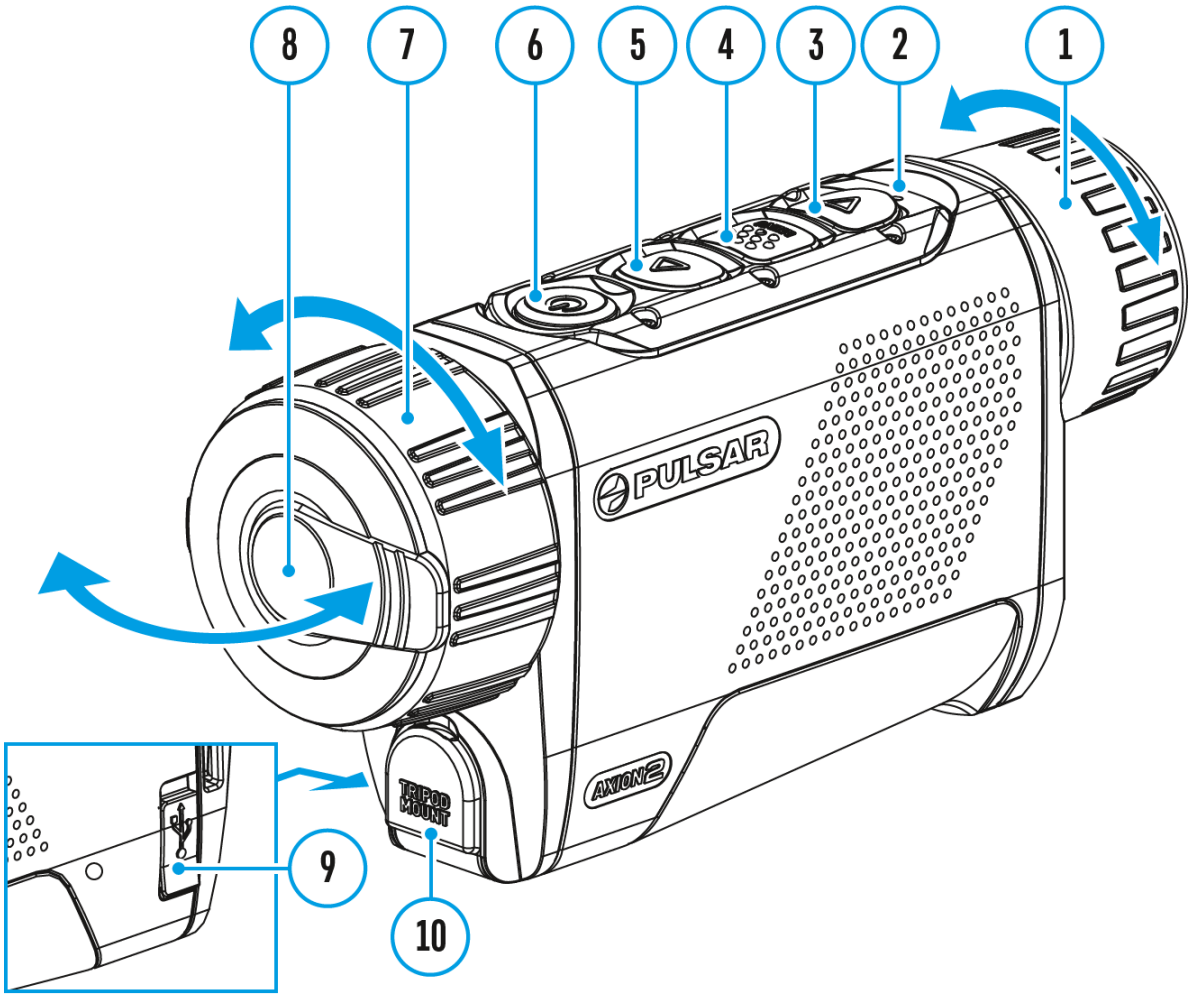

Axion 2thermal imagers are equipped with a stadiametric rangefinder which allows the user to determine the approximate distance to an object of a known size with reasonable accuracy.

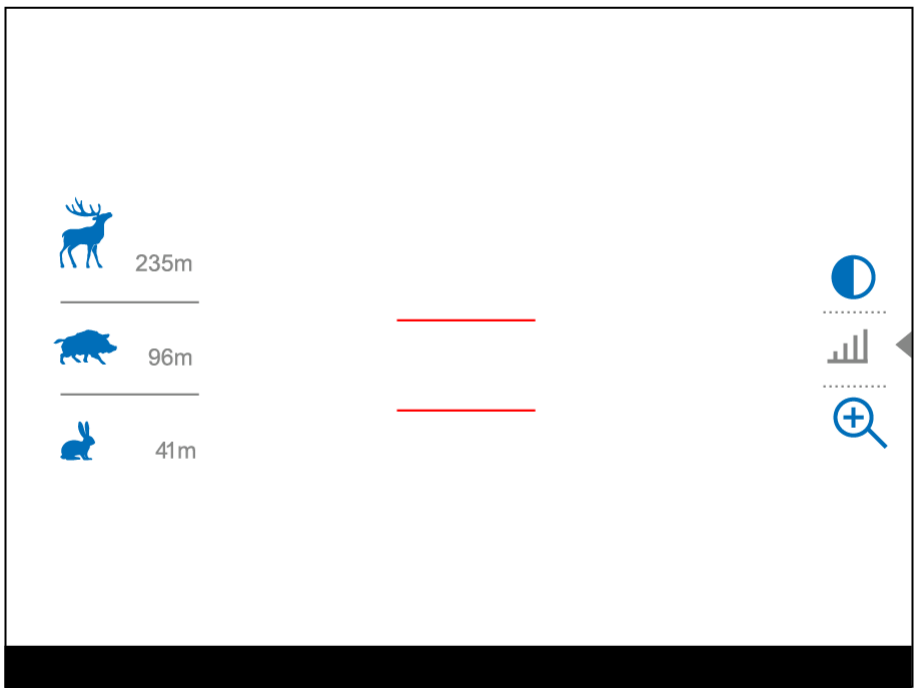

---

1. Select the **Stadiametric Rangefinder** function with short presses of the **MENU (4)** button until the icon is selected.
2. You will see on the display: measurement bars, icons of three reference objects and respective distances for the three objects.
3. Position the lower fixed bar under the object being ranged.
4. By pressing the **UP (5)/DOWN (3)** buttons, move the upper horizontal bar relative to the lower fixed bar until the object fits entirely between the two bars. The distance to the object is automatically recalculated as you move the upper line.
5. Exit the rangefinder mode with a long press of the **MENU (4)**button or wait 10 seconds to exit automatically.

Notes:

- There are three predefined values for the reference objects: Hare - 0.3 m height, Boar - 0.7 m height, Deer - 1.7 m height.
- Before it appears on the display, a measured distance value is rounded up to 5m for larger values and rounded down to 1m for smaller values.
- To select the unit of measurement (Meters or Yards), go to the **General Settings** Image not found or type unknown menu item => **Units of Measure** submenu.

Installing the Device on a Tripod

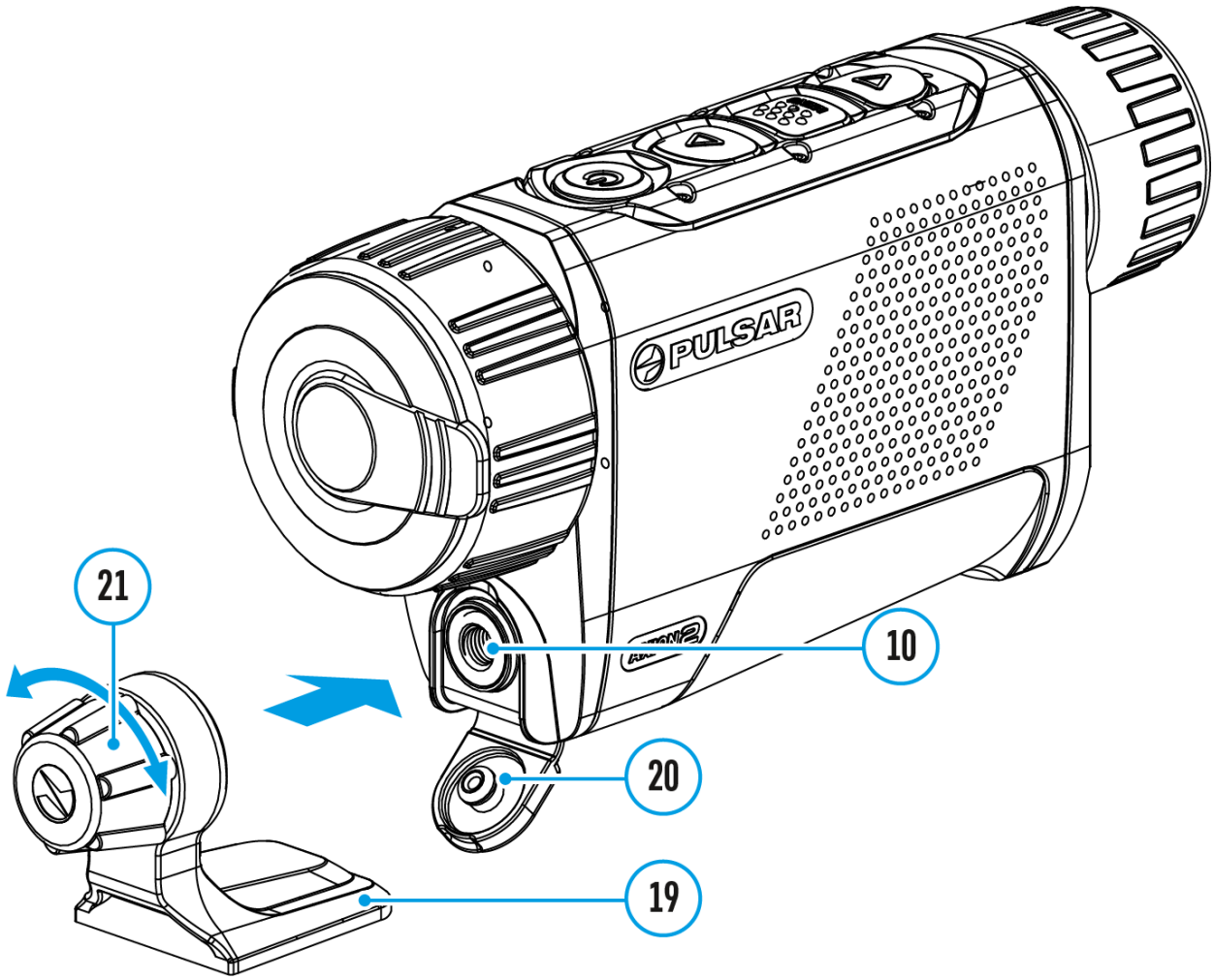

1. Open the cover **(20)** of the socket **(10)**.
2. Attach the tripod adaptor **(19)** to the socket **(10)**.
3. Rotate the adaptor handle clockwise until it stops.
4. Secure the adaptor with the device on a tripod.

USB Connection

Show device diagram

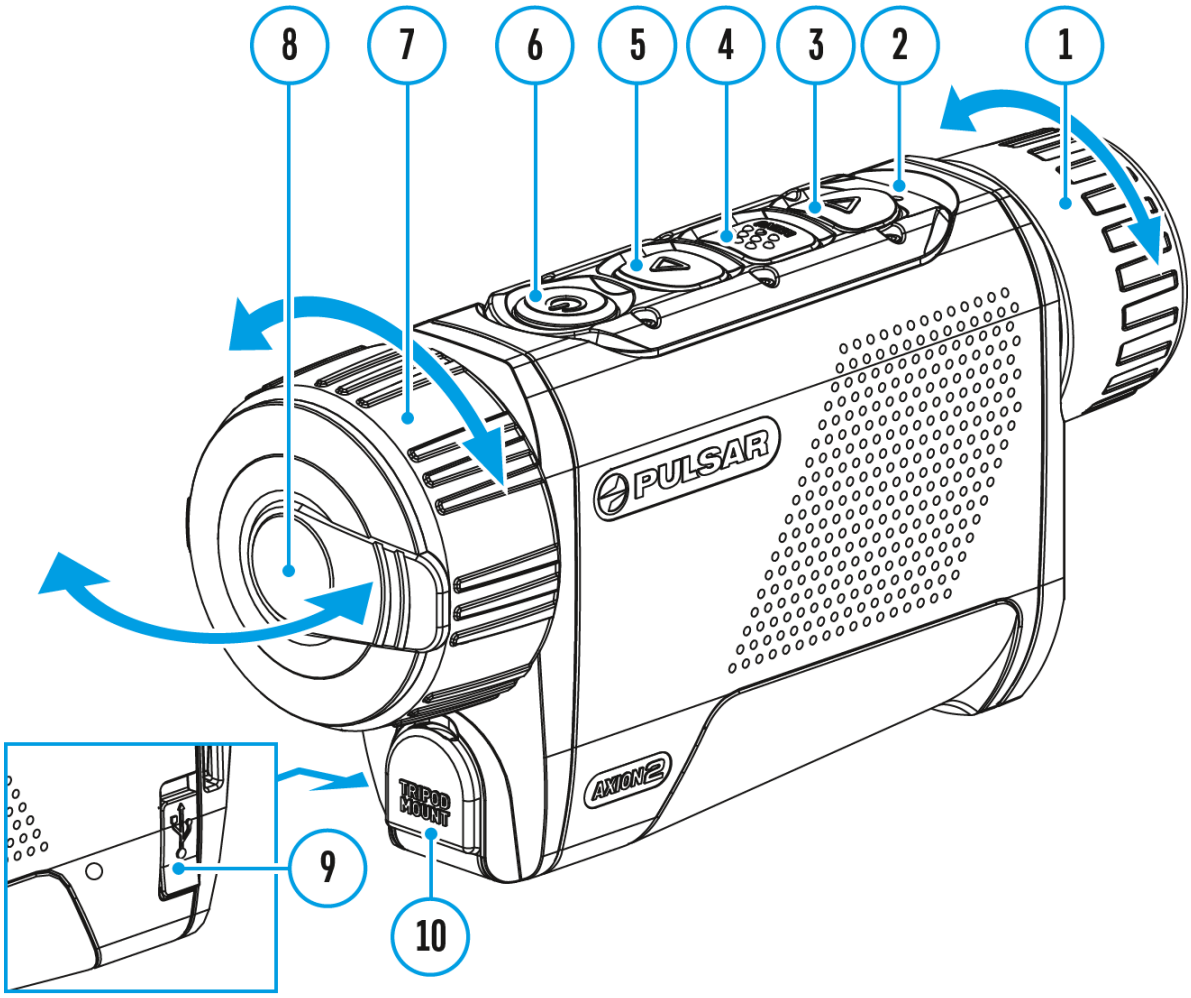

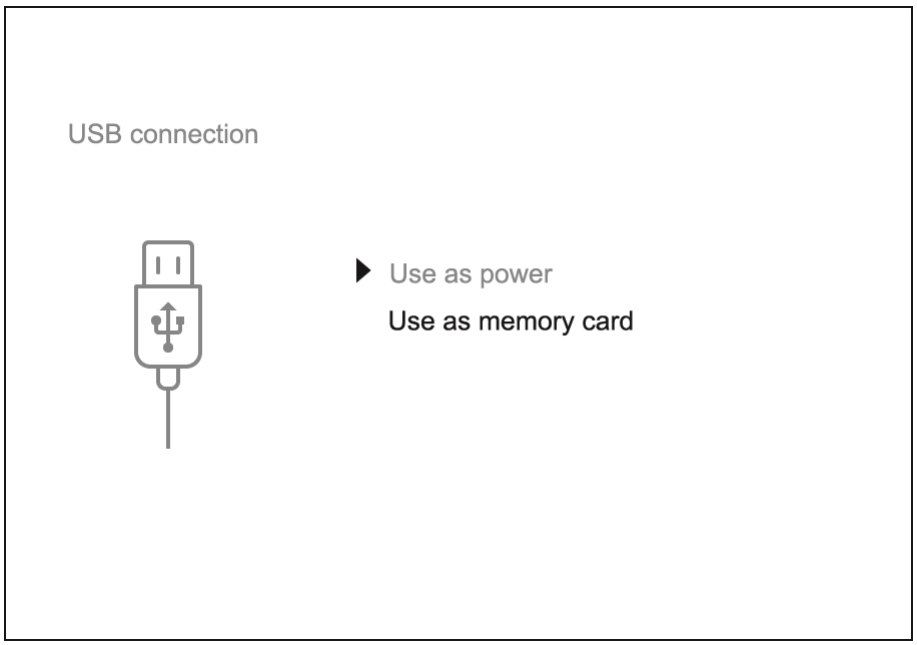

1. Connect one end of the USB cable to the USB Type-C port **(9)** of your device and the other end to the USB port of your PC / laptop using a USB Type-A adapter.
2. Turn the device on with a short press of the **ON/OFF(6)** button (a device that has been turned off cannot be detected by your computer).
3. Your device will be detected by the computer automatically; no drivers need to be installed.
4. Two connection modes will appear on the display: **Power** and **Memory Card**(external storage device).
5. Select the connection mode with the **UP (5)/DOWN (3)** buttons.
6. Confirm the selection with a short press of the **MENU (4)** button.

Power

- In this mode, a PC/laptop is used as an external power supply. The status bar shows the icon . The device continues operating and all functions are available.
- Battery recharge feasibility depends on your computer's USB port.
- When the USB is disconnected from the device when in the **Power** mode, the device keeps operating with the Battery Pack if it is available and sufficiently charged.

Memory Card (external memory)

- In this mode the device is detected by the computer as a flash card. This mode is designed for work with the files saved in the device's memory. The device's functions are not available in this mode; the device turns off automatically.
- If video recording was in progress when the connection was made, recording stops and the video is saved.
- If the device is in **Memory Card** mode and is disconnected from USB, the device will remain on.

Stream Vision 2



Install the Stream Vision 2 application to download files, update firmware, control the device by remote control and broadcast images from your device to a smartphone or a tablet via WiFi.

We recommend using the latest version – Stream Vision 2.

Mobile App
STREAM VISION 2

Download from Google Play

Download from App Store

Firmware Update

1. Download the free Stream Vision 2 App in Google Play or App Store.
2. Connect your Pulsar device to your mobile device (smartphone or tablet).
3. Launch Stream Vision 2 and go to section “Settings”.
4. Select your Pulsar device and press “Check firmware update”.
5. Wait for the update to download and install. Pulsar device will reboot and will be ready to operate.

Important:

- if your Pulsar device is connected to a phone or mobile device, please turn on mobile data transfer (GPRS/3G/4G) to download update;
- if your Pulsar device is not connected to your phone or mobile device but is already listed in “Settings” > “My devices” section, you may use Wi-Fi to download update.

Find answers to frequently asked questions about using Stream Vision 2 **here**.

Technical Inspection

It is recommended to inspect your device before each use. Check the following:

- The device should be free of any cracks or deformations.
- The lenses should be free of cracks, grease, dirt or debris.
- The battery level of the device should be full. Electrical sockets should be free of salts, oxidation, or other debris.
- All controls should be responsive.

Technical Maintenance and Storage

Maintenance should be carried out at least twice a year and should include the following steps:

- Wipe the exterior surfaces of metal and plastic parts with a cotton cloth. Do not use chemically active substances, solvents, etc. as these will damage the paint.
- Clean the electric contacts of the Battery Pack and the device's battery slot using a non-greasy organic solvent.
- Check the objective and eyepiece lenses and if required, remove dust and sand from the optics (it is preferable to use a non-contact method). Cleaning of the exterior surfaces of the optics should be done with cleaners designed especially for this purpose.
- Store the device in a carrying case. Remove the Battery Pack for long-term storage.

Troubleshooting

For technical support please contact support@pulsar-vision.com.

Answers to frequently asked questions about the devices can also be found in the **FAQ** section.

The device does not turn on

Possible cause

Battery Pack is discharged.

Solution

Charge the Battery Pack.

Device malfunction

Solution

In case of any malfunctions during operation, try resetting the device by long pressing the ON/OFF button for 10 seconds.

The device does not operate from an external power source

Possible cause

The USB cable is damaged.

Solution

Replace the USB cable.

Possible cause

The external power supply is discharged.

Solution

Charge the external power supply (if necessary).

The image is blurry, with vertical stripes or an uneven background

Possible cause

Calibration is required.

Solution

Perform the calibration according to **Calibration Mode**section.

Black screen after calibration

Solution

If the image does not clear after calibration, you need to recalibrate.

When the device is turned on, the calibration frequency is at first higher, then decreases (if the automatic calibration mode is enabled)

Possible cause

After turning on the device, it takes some time for the sensor temperature to stabilize. This is normal and is not a defect.

Poor quality image. There is noise or ghost images of previous scenes or objects

Possible cause

Manual calibration has been performed with the lens cover open.

Solution

Check the **Calibration Mode**, close the lens cover and calibrate the device.

The image is too dark

Possible cause

Brightness or contrast level is too low.

Solution

Adjust the brightness or contrast level in the **Quick Menu**.

Colour bars appear on the display or the image disappears

Possible cause

The device was exposed to static electricity during operation.

Solution

After exposure to static electricity, the device may either reboot automatically or require turning off and on again.

The image of the object being observed is missing

Possible cause

The object is behind glass, which obstructs thermal vision.

Solution

Remove the glass.

Poor image quality / Detection range reduced

Possible cause

These problems may occur during observation in adverse weather conditions (snow, rain, fog, etc.).

Smartphone or tablet PC cannot be connected to the device

Possible cause

Device password has been changed.

Solution

Delete the network and connect again using the password saved in the device.

Possible cause

The device is in an area with too many Wi-Fi networks that may be causing signal interference.

Solution

To ensure a stable Wi-Fi connection, relocate the device to an area with fewer or no Wi-Fi networks.

Possible cause

The device has a 5 GHz network enabled, but the smartphone only supports 2.4 GHz.

Solution

Switch the device's Wi-Fi bandwidth to 2.4 GHz.

More information on solving problems with connection to Stream Vision 2 by following the **link**.

Wi-Fi signal is missing or interrupted

Possible cause

Smartphone or tablet is out of range of a strong Wi-Fi signal. There are obstacles between the device and the smartphone or tablet (e.g., concrete walls).

Solution

Relocate smartphone or tablet into the Wi-Fi signal line of sight.

More information on solving problems with connection to Stream Vision 2 by following the **link**.

The image quality during the device operation at below zero temperatures is worse than at positive temperatures

Possible cause

In warm climates, objects in the background of a thermal image heat up differently because of thermal conductivity, generating a high temperature contrast and a sharper thermal image.

In cold climates, objects in the background of a thermal image will cool

down to roughly the same temperature, which leads to a greatly reduced temperature contrast and a degraded image quality. This is normal for all thermal imaging devices.

Legal Compliances and Disclaimers

Attention! A license is required for Axion Thermal Imager when exporting outside your country.

Electromagnetic compatibility. This product complies with the requirements of European standard EN 55032: 2015, Class A.

Caution!Operation of this equipment in a residential environment could cause radio interference.

Updates of the Product. The manufacturer reserves the right at any time, without mandatory prior notice to the Customer, to make changes to the package contents (subject to the applicable laws, if any), design and characteristics that do not impair the quality of the Product.

Repair. Repair of the product is available within 5 years after purchase of the product.

Limitation of Liability. Subject to mandatory applicable laws and regulations: manufacturer will not be liable for any claims, actions, suits, proceedings, costs, expenses, damages or liabilities (if any), arising out of the use of this product. Operation and use of the product are the sole responsibility of the Customer. Manufacturer’s sole undertaking is limited to providing the product(s) and related services in accordance with the terms and conditions of concluded transactions, including provisions established in warranty. The provision of products sold and services performed by Manufacturer to the Customer shall not be interpreted, construed, or regarded, either expressly or implied, as being for the benefit of or creating any obligation toward any third party (other than Distributor, Dealer, Buyer). Manufacturer’s liability hereunder for damages, regardless of the form or action, shall not exceed the fees or other charges paid to Manufacturer for the product(s) and/or service(s).

MANUFACTURER WILL NOT BE LIABLE FOR LOST REVENUES OR INDIRECT,

SPECIAL, INCIDENTAL, CONSEQUENTIAL, EXEMPLARY, OR PUNITIVE DAMAGES, EVEN IF THE MANUFACTURER KNEW OR SHOULD HAVE KNOWN THAT SUCH DAMAGES WERE POSSIBLE AND EVEN IF DIRECT DAMAGES DO NOT SATISFY A REMEDY.

